Technical Handbook

Alcatel 9400AWY

Rel.1.0

11–13–15–18–23–25–28–32–38 GHz
short–haul low/medium capacity digital microwave radio links

Versions up to 1.0.0

ALCATEL

3DB 05653 BAAA Ed.01

All rights reserved. Passing on and copying of this document, use and communication of its contents not permitted without written authorization from Alcatel.

TABLE OF CONTENTS

LIST OF FIGURES AND TABLES 6

PRELIMINARY INFORMATION 11

HANDBOOK APPLICABILITY, PURPOSE AND HISTORY 12

HANDBOOK STRUCTURE 12

SAFETY–EMC–ESD NORMS AND EQUIPMENT LABELLING 13

QUICK GUIDE 14

SECTION 1: SYSTEM DESCRIPTION AND TECHNICAL SPECIFICATIONS . . 17

1–1 INTRODUCTION TO THE 9400 AWY RADIO SYSTEM FAMILY 19
- **1–1.1 Introduction** 19
- **1–1.2 General description** 20
- **1–1.3 Network applications** 21
  - 1–1.3.1 Cellular backhaul applications 21
  - 1–1.3.2 Fixed access networks for Public Telecom or CLECs 22
  - 1–1.3.3 Private voice/data network 23
- **1–1.4 User interfaces, service channels and additional interfaces** 24
  - 1–1.4.1 User interface 24
  - 1–1.4.2 Service channels 24
  - 1–1.4.3 Additional interfaces 24
- **1–1.5 Equipment architecture** 25
  - 1–1.5.1 IDU (Indoor Unit) 26
  - 1–1.5.2 ODU (Outdoor Unit) 29
  - 1–1.5.3 IDU–ODU cable 30
- **1–1.6 System configurations** 31
  - 1–1.6.1 Unprotected configurations 32
  - 1–1.6.2 Protected configurations 34

1–2 TECHNICAL SPECIFICATIONS 39
- **1–2.1 General Characteristics** 40
  - 1–2.1.1 Reference system standards 41

1–2.1.2 RF channelling 42
1–2.1.3 Transmitted power at antenna port (ETSI and FCC) 43
1–2.1.4 99% power channel bandwidth and Emission Designator 44
1–2.1.5 ETSI System Characteristics 45
1–2.1.6 FCC System Characteristics 49
1–2.1.7 Antenna gain (typical/guaranteed gain at mid–band) 53
1–2.1.8 Switching system 53
1–2.2 Tributary interfaces 54
1–2.3 Modem 54
1–2.4 Maximum capacity and Modulation type 54
1–2.5 IDU–ODU cable 54
1–2.6 Man–machine interface 55
1–2.7 Alarms 55
1–2.8 Power supply 55
1–2.9 Mechanical characteristics 55
1–2.10 Environmental conditions 56
1–2.11 Electro–magnetic compatibility/safety 56

SECTION 2: SYSTEM COMPOSITION AND CONFIGURATIONS 57

2–1 IDU PART LIST 59

2–2 IDU PROVISIONING 63
2–2.1 1+0 Compact IDU composition and equipment provisioning 64
2–2.2 1+0 Extendable IDU composition and equipment provisioning 66
2–2.3 1+1 IDU composition and equipment provisioning 68

2–3 ODU AND ANTENNA CONFIGURATIONS, PART LISTS AND PROVISIONING 71
2–3.1 ODU general description 71
2–3.2 ODU mechanical design 71
2–3.3 ODU configurations 72
2–3.4 ODU part lists 73
2–3.5 Antenna configurations 78
2–3.5.1 1+0 configuration with integrated antenna 79
2–3.5.2 1+1 HSB configuration 80
2–3.5.3 Configuration with separated antenna 81
2–3.6 Integrated antenna part list 83
2–3.7 Coupler part list 84
2–3.8 Part list of ODU accessories and installation materials 85

2–4 IDU OPERATIVE INFORMATION 87
2–4.1 Cautions to avoid equipment damage 88
2–4.2 Access unit 89
2–4.2.1 Access unit front view and access points 90
2–4.2.2 Summary of Access unit external interfaces 90
2–4.3 Main IDU unit 100
2–4.3.1 Main IDU unit assembly 100
2–4.3.2 Main IDU unit front view and access points 101
2–4.4 Flash Card 106
2–4.4.1 General 106
2–4.4.2 Flash Card identification 106
2–4.4.3 Flash Card contents 107
2–4.4.4 Flash Card upgrade 108
2–4.5 Extension IDU unit 109
2–4.5.1 Extension IDU unit assembly 109

All rights reserved. Passing on and copying of this document, use and communication of its contents not permitted without written authorization from Alcatel.

All rights reserved. Passing on and copying of this document, use and communication of its contents not permitted without written authorization from Alcatel.

2–4.5.2 Extension IDU unit front view and access points 110
2–4.6 Fans unit 112

2–5 DISTRIBUTOR SUBRACKS 113

2–6 ODU AND RELATED OPTIONAL TOOLS OPERATIVE INFORMATION 115
2–6.1 ODU operative information 115
2–6.2 PSK operative information 117
2–6.2.1 PSK assembly description 117
2–6.2.2 PSK handset description 118
2–6.2.3 PSK instructions for tests/measurements 119
2–6.3 Rx power monitoring cable operative information 120

2–7 STATION LAYOUTS 121
2–7.1 Constraints for 9400AWY–IDU multiple equipping in a rack 122
2–7.2 Hardware setting 122
2–7.3 Hardware installation 122
2–7.4 Layouts and connections 123
2–7.4.1 9400AWY (1+0) compact 123
2–7.4.2 9400AWY (1+0) Extendable to (1+1) 124
2–7.4.3 9400AWY (1+1) HSB–SD or FD–DA AP/CP with two antennas 125
2–7.4.4 9400AWY (1+1) HSB or FD–CP with one antenna 126
2–7.4.5 9400AWY (1+1) FD–AP with one double polar external antenna 127

SECTION 3: MAINTENANCE 129

3–1 MAINTENANCE POLICY 131
3–1.1 Classification of maintenance levels and operators 131
3–1.2 First Level Maintenance Personnel skill 132
3–1.3 Second Level Maintenance Personnel skill 132

3–2 USE OF EOW FUNCTIONS 133
3–2.1 Telephone kit and telephone set description 134
3–2.2 Setting information 136
3–2.3 Call Set–up/End by Telephone Set connected on the Access unit 139
3–2.4 Call Set–up/End by the PSK connected to the ODU 139

3–3 MAINTENANCE TOOLS AND SPARE PARTS 141
3–3.1 Introduction 141
3–3.2 Instruments and accessories 141
3–3.2.1 Software tools 141
3–3.2.2 Maintenance Tool Kit 141
3–3.3 Set of spare parts 144
3–3.3.1 Types of Spare Parts 144
3–3.3.2 Number of spare parts 145
3–3.3.3 General rules on spare parts management 145
3–3.3.4 Spare Flash Card management 145

3–4 FIRST LEVEL MAINTENANCE 147
3–4.1 Introduction 147
3–4.2 System state display by visual indications 147
3–4.2.1 LED test 147
3–4.2.2 Alarm LEDs on the MAIN unit 147
3–4.2.3 Alarm LEDs on the Extension unit 149
3–4.3 Craft Terminal interface commonly used commands 150

3–5 SECOND LEVEL MAINTENANCE **151**
3–5.1 Introduction **151**
3–5.2 Warnings **152**
3–5.2.1 EMC norms 152
3–5.2.2 Safety rules 152
3–5.2.3 Cautions to avoid equipment damage 152
3–5.3 Preventive Maintenance **153**
3–5.3.1 Preventive Maintenance every year 153
3–5.3.2 Preventive Maintenance for Fans unit 154
3–5.4 Consequences of unit extraction in the IDU **155**
3–5.4.1 Consequences of the MAIN unit extraction 155
3–5.4.2 Consequences of the Extension unit extraction 156
3–5.4.3 Consequences of the Access unit extraction 156
3–5.4.4 Consequences of the FANS unit extraction 156
3–5.4.5 Note on dummy plates 156
3–5.5 Corrective Maintenance **157**
3–5.5.1 General flow–chart 157
3–5.5.2 Alarm acknowledgment and attending 158
3–5.5.3 Troubleshooting starting with visual indications 159
3–5.5.4 Troubleshooting via Craft Terminal 161
3–5.5.5 IDU unit replacement 163
3–5.5.6 ODU replacement 169
3–5.6 Faulty unit repair and Repair Form **169**
3–5.6.1 Faulty unit sending back to repair center 169
3–5.6.2 Repair Form filling 169

SECTION 4: FUNCTIONAL DESCRIPTION **171**

4–1 SYSTEM DESCRIPTION **173**
4–1.1 Functional description and components **174**
4–1.1.1 Functions and configurations 174
4–1.1.2 IDU and ODU Components 175
4–1.2 Control subsystem hardware architecture **179**
4–1.2.1 Function partitioning 179
4–1.2.2 Control elements 179
4–1.3 IDU functional description **181**
4–1.3.1 1+0 Compact IDU configuration 182
4–1.3.2 1+0 IDU Extendable configuration 183
4–1.3.3 1+1 IDU configuration 184
4–1.3.4 Access IDU unit 185
4–1.3.5 Main IDU unit 185
4–1.3.6 Extension IDU unit 188
4–1.4 ODU functional description **189**
4–1.5 Radio Transmission features **191**
4–1.5.1 Frequency Agility 191
4–1.5.2 Transmitted power control: ATPC function 191
4–1.5.3 Transmitted power control: RTPC function 194
4–1.5.4 Internal service channel 195
4–1.5.5 User service channels 196
4–1.6 Protection schemes **199**
4–1.6.1 Tx protection schemes 199
4–1.6.2 Rx protection schemes 201
4–1.6.3 User service channel protection 202
4–1.7 Loopbacks **203**

All rights reserved. Passing on and copying of this document, use and communication of its contents not permitted without written authorization from Alcatel.

4–1.7.1 IDU loopbacks 203
4–1.7.2 IDU loopbacks 204
4–1.8 Network management and interworking 206
4–1.8.1 Local monitoring 206
4–1.8.2 Small/medium sized networks: RECT 207
4–1.8.3 Large mixed network: TMN 207
4–1.8.4 1353 SH operation system 208
4–1.8.5 Use of NMS channels 209

4–2 ALARMS 213
4–2.1 Alarms Provided by Item HW 213
4–2.1.1 IDU Alarms 214
4–2.1.2 ODU Alarms 216
4–2.2 Alarm severity 217
4–2.2.1 Communication Alarms 218
4–2.2.2 Equipment Alarms 219

SECTION 5: APPENDICES 221

APPENDIX A : SAFETY–EMC–ESD NORMS AND EQUIPMENT LABELLING 223
A.1 : Introduction 223
A.2 : Compliance with European Norms 223
A.3 : Safety Rules 224
A.3.1 : General Rules 224
A.3.2 : Labels Indicating Danger, Forbiddance, Command 225
A.3.3 : Dangerous Electrical Voltages 226
A.3.4 : Risks of Explosions 227
A.3.5 : Moving Mechanical Parts 227
A.3.6 : Heat–radiating Mechanical Parts 228
A.3.7 : Microwave radiations 229
A.3.8 : Specific safety rules in this handbook 229
A.4 : Electromagnetic Compatibility (EMC norms) 230
A.4.1 : EMC General Norms – Installation 230
A.4.2 : EMC General Norms – Turn–on, Tests & Operation 230
A.4.3 : EMC General Norms – Maintenance 230
A.5 : Equipment protection against electrostatic discharges 231
A.6 : Suggestions, notes and cautions 231
A.7 : Labels affixed to the Equipment 232
A.7.1 : Labels specific for the equipment 232
A.7.2 : General Use Labels 234

APPENDIX B : DOCUMENTATION GUIDE 239
B.1 : Handbook guide 239
B.1.1 : Handbook applicability 239
B.1.2 : Purpose of the handbook 240
B.1.3 : Handbook history 241
B.2 : Documentation set description 243
B.2.1 : 9400AWY Rel.1.0 product–release–version handbooks 243
B.2.2 : General on Alcatel Customer Documentation 246

APPENDIX C : LIST OF SYMBOLS AND ABBREVIATIONS 251

All rights reserved. Passing on and copying of this document, use and communication of its contents not permitted without written authorization from Alcatel.

LIST OF FIGURES AND TABLES

FIGURES

Fig. 1. Cellular GSM applications 21
Fig. 2. Cellular UMTS applications 21
Fig. 3. Wireless Access for large customers by Public Telecom 22
Fig. 4. Alcatel 9400 AWY integration in Wireless IP and LMDS network 23
Fig. 5. Alcatel 9400 AWY integration in Wireless IP and LMDS network 23
Fig. 6. “1+0” and “1+1” IDU shelves 26
Fig. 7. ODU block diagram 30
Fig. 8. Equipment and block diagrams of 9400AWY 1+0 COMPACT 32
Fig. 9. Equipment and block diagrams of 9400AWY 1+0 EXTENDABLE 33
Fig. 10. Equipment and block diagrams of 9400AWY 1+1 HSB SD 34
Fig. 11. Equipment and block diagrams of 9400AWY 1+1 HSB (one antenna) 35
Fig. 12. Equipment and block diagrams of 9400AWY 1+1 FD Double Antenna CP or AP 36
Fig. 13. Equipment and block diagrams of 9400AWY 1+1 FD one antenna CP 37
Fig. 14. Equipment and block diagrams of 9400AWY 1+1 FD one antenna AP 38
Fig. 15. 1+0 Compact IDU: composition 64
Fig. 16. 1+0 Extendable IDU: composition 66
Fig. 17. 1+1 IDU: composition 68
Fig. 18. ODU view, dimensions and weight 71
Fig. 19. ODU view integrated antenna (V polarization) 79
Fig. 20. ODU view integrated antenna (H polarization) 79
Fig. 21. Coupler 80
Fig. 22. ODU with separated antenna 81
Fig. 23. ODU coupler 84
Fig. 24. ODU solar shield 86
Fig. 25. Access Unit assembly view 89
Fig. 26. Access Unit front view 90
Fig. 27. Equipment outputs (summarizing and housekeeping) 97
Fig. 28. Equipment inputs – relay scheme 98
Fig. 29. Equipment inputs – open collector scheme 98
Fig. 30. Main IDU Unit assembly view 100
Fig. 31. Main IDU Unit front view 101
Fig. 32. LEDs on the Main Unit Front Panel 102
Fig. 33. FLASH CARD profile and insertion direction 106
Fig. 34. Extension IDU Unit assembly view 109
Fig. 35. Extension IDU Unit front view 110
Fig. 36. LEDs on the Extension IDU Unit front panel 111
Fig. 37. Fans Unit assembly view 112
Fig. 38. Assembly view of DISTRIBUTOR SUBRACK FOR 1.0/2.3 113
Fig. 39. Assembly view of DISTRIBUTOR SUBRACK FOR 1.6/5.6 113
Fig. 40. Assembly view of DISTRIBUTOR SUBRACK FOR 120 OHM 114
Fig. 41. Assembly view of DISTRIBUTOR SUBRACK FOR BNC 114
Fig. 42. ODU views 116
Fig. 43. Portable service kit (PSK) assembly view 117
Fig. 44. Portable Service Kit handset 118
Fig. 45. Rx power monitoring cable 120
Fig. 46. Station layout of 9400AWY (1+0) compact 123
Fig. 47. Station layout of 9400AWY (1+0) Extendable to (1+1) 124
Fig. 48. Station layout of 9400AWY (1+1) HSB–SD or FD–DA AP/CP with two antennas 125
Fig. 49. Station layout of 9400AWY (1+1) HSB or FD–CP with one antenna 126
Fig. 50. Station layout of 9400AWY (1+1) FD–AP with one double polar external antenna 127

All rights reserved. Passing on and copying of this document, use and communication of its contents not permitted without written authorization from Alcatel.

All rights reserved. Passing on and copying of this document, use and communication of its contents not permitted without written authorization from Alcatel.

Fig. 51. DTMF Telephone kit assembly 134
Fig. 52. Telephone set 135
Fig. 53. Cables 1.0/2.3 extractor 143
Fig. 54. Cord for use with SIBDL 143
Fig. 55. LEDs and pushbutton on MAIN unit for maintenance purposes 148
Fig. 56. LEDs and pushbutton on Extension unit for maintenance purposes 149
Fig. 57. Corrective Maintenance general flow–chart 157
Fig. 58. Troubleshooting starting with visual indications 159
Fig. 59. Repair form 170
Fig. 60. (1+0) IDU 175
Fig. 61. (1+1) IDU 175
Fig. 62. (1+0) ODU (electrical or optical) 176
Fig. 63. (1+1) ODU (only electrical) 176
Fig. 64. Control subsystem block diagram 180
Fig. 65. 1+0 Compact IDU configuration 182
Fig. 66. 1+0 IDU block diagram 182
Fig. 67. 1+0 IDU Extendable configuration 183
Fig. 68. 1+1 IDU configuration 184
Fig. 69. 1+1 IDU block diagram 184
Fig. 70. Muldem Board block diagram 186
Fig. 71. Power distribution in 1+1 systems 187
Fig. 72. ODU block diagram 189
Fig. 73. ATPC functionality 193
Fig. 74. ATPC in HSB configuration 194
Fig. 75. EOW channel block diagram in 1+0 configuration 197
Fig. 76. EOW channel block diagram in 1+1 configuration 198
Fig. 77. Switch EPS–Tx detail 199
Fig. 78. EPS–Rx Switching logic on Main and Spare boards 202
Fig. 79. Near end IDU cable loopback 203
Fig. 80. Far end IDU tributary loopback 203
Fig. 81. Near end tributary loopback 204
Fig. 82. Near end ODU cable loopback 204
Fig. 83. Near end RF loopback 204
Fig. 84. RF loopback scheme 205
Fig. 85. TMN with SNMP 207
Fig. 86. Possible NMS connections 210
Fig. 87. Station connected by the NMS–RF channel 211
Fig. 88. Antistatic protection device kit 231
Fig. 89. Label affixed on the IDU 232
Fig. 90. Label affixed on the ODU 233
Fig. 91. Subrack labels 235
Fig. 92. Labels on units with standard cover plate 235
Fig. 93. Internal label for Printed Board Assembly 236
Fig. 94. Back panels internal label 237
Fig. 95. Label specifying item not on catalogue (P/N. and serial number) 238
Fig. 96. Label specifying item on catalogue (P/N. and serial number) 238
Fig. 97. Example of SWP Release and Version numbering 247
Fig. 98. Example of Product levels and associated Customer Documentation 248

TABLES

Tab. 1. Quick guide 14
Tab. 2. Available Flash cards 28
Tab. 3. Bit rate of the IDU–ODU signal on the cable 30
Tab. 4. 13 to 38 GHz 4/16 QAM configurations 31

Tab. 5. 9400 AWY family 39
Tab. 6. ETSI System Characteristics 16E1–E3 8E1 with BER 10–3 45
Tab. 7. ETSI System Characteristics 16E1–E3 8E1 BER 10–6 46
Tab. 8. ETSI System Characteristics 4E1 2E1 BER 10–3 47
Tab. 9. ETSI System Characteristics 4E1 2E1 BER 10–6 48
Tab. 10. FCC System Characteristics 16DS1 DS3 8DS1 BER 10–3 49
Tab. 11. FCC System Characteristics 16DS1 DS3 8DS1 BER 10–6 50
Tab. 12. FCC System Characteristics 4DS1 2DS1 BER 10–3 51
Tab. 13. FCC System Characteristics 4DS1 2DS1 BER 10–6 52
Tab. 14. IDU part lists 60
Tab. 15. Notes to Tab. 14. 62
Tab. 16. 1+0 Compact IDU: equipment provisioning 65
Tab. 17. 1+0 Extendable IDU: equipment provisioning 67
Tab. 18. 1+1 IDU: equipment provisioning 69
Tab. 19. ODU configurations 72
Tab. 20. 11 GHz ODU 73
Tab. 21. 13 GHz ODU 73
Tab. 22. 15 GHz ODU 74
Tab. 23. 18 GHz ODU 75
Tab. 24. 23 GHz ODU 75
Tab. 25. 25 GHz ODU 76
Tab. 26. 28 GHz ODU 76
Tab. 27. 32 GHz ODU 76
Tab. 28. 38 GHz ODU 77
Tab. 29. Pole Mounting versions 78
Tab. 30. Available couplers 80
Tab. 31. ODU Output flanges with external antenna 82
Tab. 32. Part list of available integrated antennas 83
Tab. 33. Coupler part list 84
Tab. 34. Part list of ODU accessories and installation materials 85
Tab. 35. Notes to Tab. 34. 85
Tab. 36. Access Unit external interfaces 90
Tab. 37. I/O (tributaries 1/8) pin–out 91
Tab. 38. I/O (tributaries 9/16) pin–out 92
Tab. 39. NMS–V.11 + Audio 1 connector pin–out 93
Tab. 40. NMS–G.703 + Audio 2 connector pin–out 94
Tab. 41. User 64 kbit/s service channel connector pin–out 95
Tab. 42. Alarms Housekeeping connector pin–out 96
Tab. 43. Main Unit external interfaces 101
Tab. 44. ECT connections 103
Tab. 45. OS (or ECT) connections 104
Tab. 46. LEDs for Ethernet user data interfaces 104
Tab. 47. Power supply connections 105
Tab. 48. Extension Unit external interfaces 110
Tab. 49. ODU external interfaces 115
Tab. 50. RF interface 115
Tab. 51. Maintenance Tool Kit 142
Tab. 52. IDU spare parts list 144
Tab. 53. Normal condition (no alarm) of LEDs on the Extension unit 149
Tab. 54. IDU unit replacement procedures 163
Tab. 55. Markets, product type, tributaries and modulations forecasted 174
Tab. 56. Shelves Equipment Types 176
Tab. 57. IDU allowed board/plug–in types in (1+0) configurations 177
Tab. 58. IDU allowed board/plug–in types in (1+1) configurations 177

All rights reserved. Passing on and copying of this document, use and communication of its contents not permitted without written authorization from Alcatel.

Tab. 59. EPS–Tx switch priority table 200
Tab. 60. Hot Stand–by switch priority table 200
Tab. 61. EPS–Rx switch priority table 202
Tab. 62. Label references 234
Tab. 63. Handbook history 241
Tab. 64. 9400 AWY Rel.1.0 product release handbooks 243
Tab. 65. 9400AWY Technical Handbooks 244
Tab. 66. 9400AWY Installation and Line–Up Handbooks 244
Tab. 67. Operator's Handbooks related to the specific Software Package SWP 244
Tab. 69. 9400AWY Rel.1.0 Documentation on CD–ROM 245
Tab. 70. Documentation common to Alcatel Network Elements using 1320CT platform 245
Tab. 71. List of symbols 251
Tab. 72. List of abbreviations 251

All rights reserved. Passing on and copying of this document, use and communication of its contents not permitted without written authorization from Alcatel.

All rights reserved. Passing on and copying of this document, use and communication of its contents not permitted without written authorization from Alcatel.

1AA 00014 0004 (9007) A4 – ALICE 04.10

PRELIMINARY INFORMATION

All rights reserved. Passing on and copying of this document, use and communication of its contents not permitted without written authorization from Alcatel.

a) **Warranty**

Any warranty must be referred exclusively to the terms of the contract of sale of the equipment to which this handbook refers to.

ALCATEL makes no warranty of any kind with regards to this manual, and specifically disclaims the implied warranties of merchantability and fitness for a particular purpose. ALCATEL will not be liable for errors contained herein or for damages, whether direct, indirect, consequential, incidental, or special, in connection with the furnishing, performance, or use of this material.

b) **Information**

The product specification and/or performance levels contained in this document are for information purposes only and are subject to change without notice. They do not represent any obligation on the part of ALCATEL.

c) **Copyright Notification**

The technical information of this manual is the property of ALCATEL and must not be copied, reproduced or disclosed to a third party without written consent.

d) **Safety recommendations**

The safety recommendations here below must be considered to avoid injuries on persons and/or damage to the equipment:

1) **Service Personnel**

Installation and service must be carried out by authorized persons having appropriate technical training and experience necessary to be aware of hazardous operations during installation and service, so as to prevent any personal injury or danger to other persons, as well as prevent damaging the equipment.

2) **Access to the Equipment**

Access to the Equipment in use must be restricted to Service Personnel only.

3) **Safety Rules**

Recommended safety rules are indicated in para.A.3 on pages 224.

Local safety regulations must be used if mandatory. Safety instructions in this handbook should be used in addition to the local safety regulations. In case of conflict between safety instructions stated in this manual and those indicated in local regulations, mandatory local norms will prevail. Should not local regulations be mandatory, then safety rules stated in this manual will prevail.

e) **Service Personnel skill**

Service Personnel must have an adequate technical background on telecommunications and in particular on the equipment subject of this handbook.

An adequate background is required to properly install, operate and maintain equipment. The fact of merely reading this handbook and the associated handbooks indicated in para. B.2.1 on page 243 is considered as not enough.

HANDBOOK APPLICABILITY, PURPOSE AND HISTORY

Please refer to para.B.1 on page 239.

HANDBOOK STRUCTURE

Information in this handbook is divided into the following parts:

a) **FRONT MATTER**
- **TABLE OF CONTENTS**
- **LIST OF FIGURES AND TABLES**
- **PRELIMINARY INFORMATION**
- **HANDBOOK APPLICABILITY, PURPOSE AND HISTORY**
- **HANDBOOK STRUCTURE**
- **SAFETY–EMC–ESD NORMS AND EQUIPMENT LABELLING**
- **QUICK GUIDE**
  It allows to access immediately the most frequently needed operative pieces of information contained in this handbook and in other related handbooks.

b) **SECTION 1: SYSTEM DESCRIPTION AND TECHNICAL SPECIFICATIONS** on page 17
This section provides the 1st level description of the equipment and sums–up its technical characteristics.

c) **SECTION 2: SYSTEM COMPOSITION AND CONFIGURATIONS** on page 57
This section contains the whole logical and operative information for the equipment provisioning and system configuration, including the setting up of logical/physical connections.

d) **SECTION 3: MAINTENANCE** on page 129
This section contains the whole logical and operative information for the equipment maintenance.

e) **SECTION 4: FUNCTIONAL DESCRIPTION** on page 171
This section provides the 2nd level description of the equipment.

f) **SECTION 5: APPENDICES** on page 221
In this section some additional information and instructions are given:
- **Appendix A – Safety–EMC–ESD norms and equipment labelling**
- **Appendix B – Documentation guide**
- **Appendix C – List of symbols and abbreviations**

All rights reserved. Passing on and copying of this document, use and communication of its contents not permitted without written authorization from Alcatel.

SAFETY–EMC–ESD NORMS AND EQUIPMENT LABELLING

a) Please refer to **Appendix A** on page 223 to obtain details regarding following information:

- **Compliance with European norms**
- **Safety rules:**

TOPIC	WARNING LABEL ON EQUIPMENT
General rules	
Dangerous Electrical Voltages	
Harmful optical signals	
Risk of explosion	
Moving mechanical parts	
Heat–radiating mechanical parts	
Microwave radiations	EMF emission warning sign

- **Equipment protection against electrostatic discharges:**

TOPIC	WARNING LABEL ON EQUIPMENT
Device sensitive to electrostatic discharges	

- **Electromagnetic Compatibility (EMC norms)**
- **Other Labels affixed to the Equipment**

b) Identical or similar information on Personal Computer, Work–Station etc., **other than ALCATEL's**, loaded with software applications described in this or other Handbooks, is supplied in the Constructor's technical documentation.

All rights reserved. Passing on and copying of this document, use and communication of its contents not permitted without written authorization from Alcatel.

QUICK GUIDE

9400AWY Rel.1.0 TECHNICAL HANDBOOK

N.B. In the documentation on CD–ROM, this table represent hyperlinks to the referenced parts.

Tab. 1. Quick guide If you need immediate operative information on how to:	
GENERAL TOPICS	
get information on system documentation	read Appendix B on page 239
have a short description of the system	read para.1–1.5 on pages 25 thru' 30
logically configure a station, logically provision equipment boards and logically set–up connections	read chapter 2–7 on page 121 of this handbook
get item P/Ns	for: – IDU, read chapter 2–1 on page 59 in this handbook – ODU and antennas, read chapter 2–3 on page 71 in this handbook
Tab. 1. continues ..	

All rights reserved. Passing on and copying of this document, use and communication of its contents not permitted without written authorization from Alcatel.

All rights reserved. Passing on and copying of this document, use and communication of its contents not permitted without written authorization from Alcatel.

.. continues Tab. 1. If you need immediate operative information on how to:	
GENERAL TOPICS FOR INSTALLATION, COMMISSIONING AND MAINTENANCE	
get information on safety, EMC, ESD norms and equipment labelling	read Appendix A on page 223
acknowledge cautions to avoid equipment damage	read para.2–4.1 on page 88
get operative information regarding the units in **IDU** (connectors, leds, buttons)	for: – **Access unit**: read para.2–4.2 on page 89 – **Main IDU unit**: read para.2–4.3 on page 100 – **Flash Card**: read para.2–4.4 on page 106 – **Extension IDU unit**: read para.2–4.5 on page 109 – **Fans unit**: read para.2–4.6 on page 112 – **Telephone kit/set**: read para.3–2.1 on page 134 – **Distributor subracks**: read chapter 2–5 on page 113
get operative information regarding **ODU**, **PSK** and **Rx power monitoring cable**	for: – **ODU**: read para.2–6.1 on page 115 – **PSK**; for: • ODU monitoring functions: para.2–6.2.3 on page 119 • EOW functions: chapter 3–2 on page 133 – **Rx power monitoring cable**: read para.2–6.3 on page 120
know the consequences of unit extraction in IDU/REG shelf	read para.3–5.4 on page 155
set and use the EOW functions of the equipment	read chapter 3–2 on page 133
Tab. 1. continues ..	

.. continues Tab. 1. If you need immediate operative information on how to:	
INSTALLATION AND COMMISSIONING	
physically install and cable the equipment hardware	get Installation Handbook (Ref.[B] on page 244) and proceed as specified by it
install or update Craft Terminal's and/or equipment's software	according to SWP used, get associated CT Operator's Handbook and read its QUICK GUIDE (same topics): for **SWP 1.0** : Ref.[D] on page 244 for **SWP 1.1** : Ref.[E] on page 244
commission equipment	get Line–up Guide (Ref.[C] on page 244) and proceed as specified by it
SYSTEM UPGRADE	
replace Flash Card to upgrade system functionalities	read para.2–4.4.4 on page 108
MAINTENANCE	
provision and manage spare parts	read para.3–3.3 on page 144
carry out First Level maintenance (system state display)	read chapter 3–4 on page 147
carry out preventive maintenance	read para.3–5.3 on page 153
carry out corrective maintenance	read para.3–5.5 on page 157

To find any other kind of information not listed in the above table, please refer to the TABLE OF CONTENTS of this handbook.

All rights reserved. Passing on and copying of this document, use and communication of its contents not permitted without written authorization from Alcatel.

SECTION 1: SYSTEM DESCRIPTION AND TECHNICAL SPECIFICATIONS

This section provides the 1st level description of the equipment and sums–up its technical characteristics.

SECTION CONTENT	PAGE
Chapter 1–1 – Introduction to the 9400 AWY radio system family It gives the 9400AWY Rel.1.0 general description, network applications, equipment architecture, and system configurations.	19
Chapter 1–2 – Technical specifications It sums–up the technical characteristics of the 9400AWY Rel.1.0.	39

All rights reserved. Passing on and copying of this document, use and communication of its contents not permitted without written authorization from Alcatel.

All rights reserved. Passing on and copying of this document, use and communication of its contents not permitted without written authorization from Alcatel.

1AA 00014 0004 (9007) A4 – ALICE 04.10

All rights reserved. Passing on and copying of this document, use and communication of its contents not permitted without written authorization from Alcatel.

1–1 INTRODUCTION TO THE 9400 AWY RADIO SYSTEM FAMILY

Text in italic indicates features not available with SWP (V.1.0.0) this handbook edition refers to. Indication of SWP versions from which they will be available is given as general information, and is subject to change.

1–1.1 Introduction

This chapter explains briefly the characteristics of the 9400 AWY equipment family; it includes the following main sub–paragraphs:

– para.1–1.2 – General description, on page 20

– para.1–1.3 – Network applications, on page 21

– para.1–1.4 – User interfaces, service channels and additional interfaces, on page 24

– para.1–1.5 – Equipment architecture, on page 25

– para.1–1.6 – System configurations, on page 31.

1–1.2 General description

The 9400 AWY is a family of digital Point to Point microwave radio systems designed to satisfy the various digital transmission needs of public and private networks for a large range of applications.

The short–haul microwave systems are particularly recommended for the interconnections of cellular networks base stations and base station controllers.

They can also be used for the rollout of public and private networks, in urban or suburban regions and by means of the Ethernet interfaces they provide a wireless solution in the access area for data connectivity as 2G/2.5G/3G networks, cellular LMDS/WIP networks and digital terminal connection (PABX, Videoconference, etc.).

The 9400 AWY represents an attractive solution for the above needs due to radio intrinsic characteristics as:

- easy and fast deployment
- effective solution in difficult geographical area
- very low cost of the complete network
- security against physical damages
- reuse of existing frequency plan
- progressive capital investment according to traffic needs

The 9400 AWY is a complete homogeneous family of PDH Point to Point low and medium capacity microwave link, fully integrated in the last SDH 9600 LSY and 9600 USY families for world wide applications in all frequency bands from 13 GHz to 38 GHz.

The main characteristics are:

- Large frequency and capacity ranges covered for ETSI and FCC market
- 2xE1, 4xE1/DS1, 8xE1/DS1, 16xE1/DS1
- 1xE3/DS3 (alternative to E1/DS1)
- Two types of modulations (4or 16 QAM) for all the RF bands (configurable by software)
- Compact design
- Flexible and evolutive equipment:
    - Frequency agility
    - Modulation agility
    - Capacity agility
- Several applications
- Circuit network

The 9400 AWY family is fully compliant to the relevant ITU–T/ITU–R/ETSI/FCC standards, including EMC and safety. Special attention was also given to those standards concerning the network management and its integration into PDH based network.

Typically, the distances achieved are:

- from 5 to 30 km for the microwave frequencies (13 to 18 GHz)
- from a few hundred meters up to 10 km for the millimeter wave frequencies (23 to 38 GHz)

All rights reserved. Passing on and copying of this document, use and communication of its contents not permitted without written authorization from Alcatel.

All rights reserved. Passing on and copying of this document, use and communication of its contents not permitted without written authorization from Alcatel.

1–1.3 Network applications

1–1.3.1 Cellular backhaul applications

A major application is related to cellular networks, mainly in urban and sub–urban areas where an increasing number of small cells are used to densify the network, leading to a need for a very high number of radio links inter–connections in the millimeter wave frequencies (23 to 38 GHz) which are well suited for short distances and allow to take advantage of increased frequency reuse.

[1] GSM applications

Point–to–point microwave is adapted to the BSC to BTS inter–connections topologies used: star or daisy–chain.

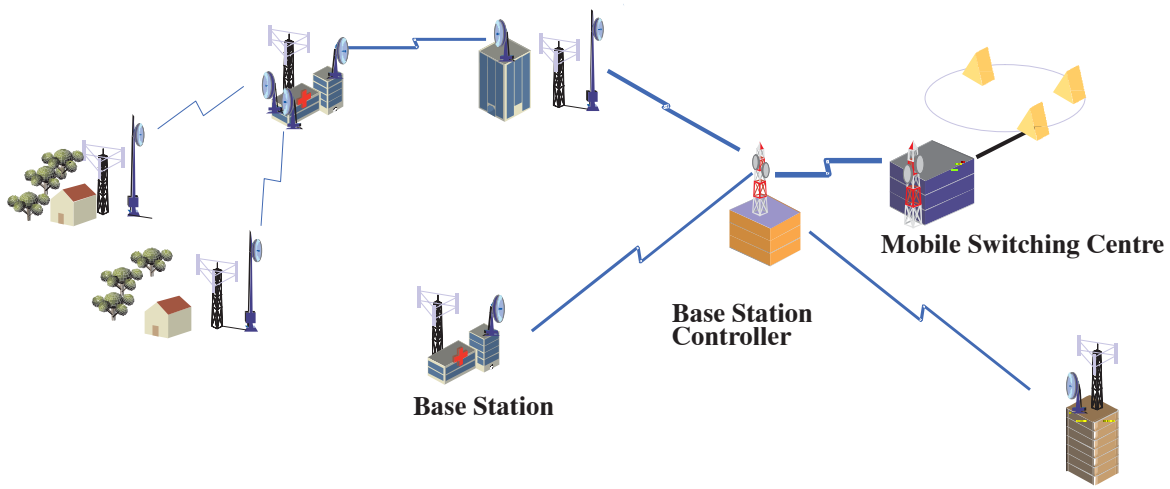

Fig. 1. Cellular GSM applications

[2] UMTS applications

The AWY product permits a streamlined transition for second to third backhaul generation.

Very often the BTS and the Node B could be collocated

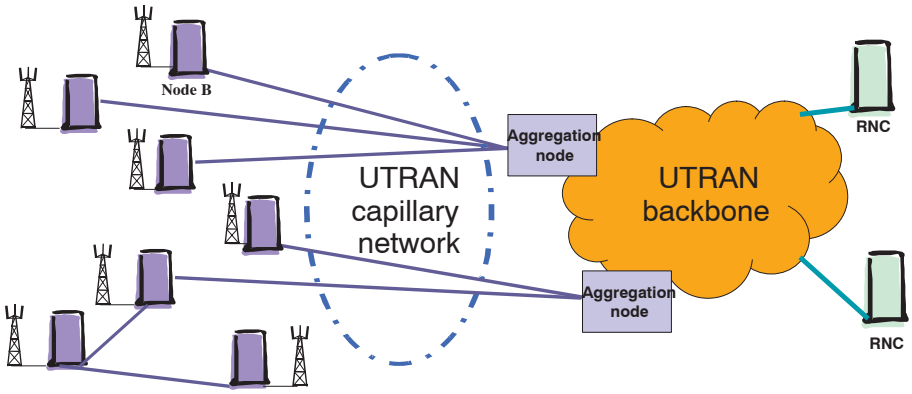

Fig. 2. Cellular UMTS applications

1–1.3.2 Fixed access networks for Public Telecom or CLECs

[1] Basic access applications

The Alcatel 9400 AWY is used for urban/sub–urban connections of high traffic customers or business districts: with NxE1/NxDS1 or E3/DS3 capacity covering distances from a few km up to 30 km.

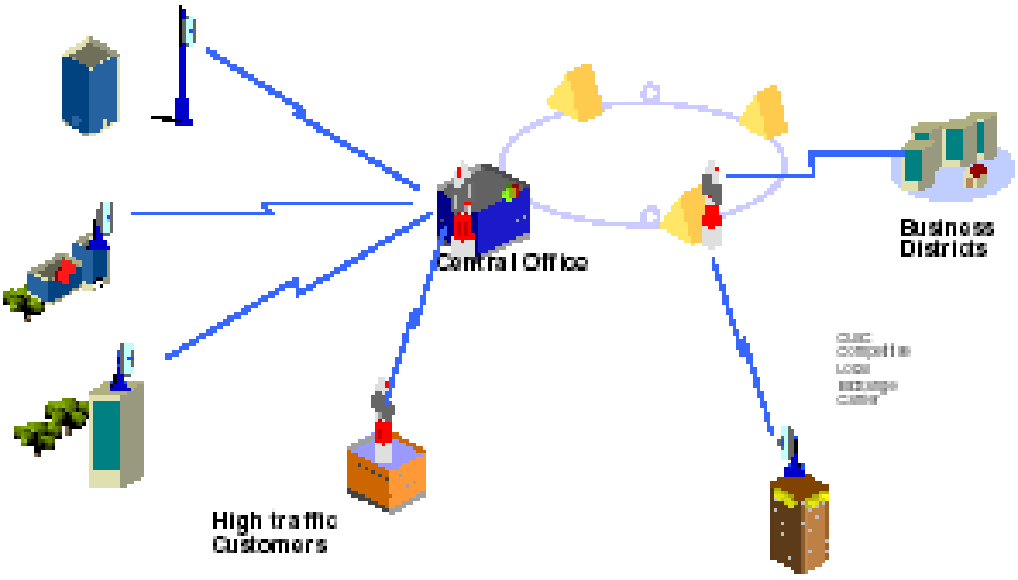

Fig. 3. Wireless Access for large customers by Public Telecom

[2] Mixed point to point and point to multipoint fixed radio application

The other applications of Alcatel 9400 AWY are linked to turn–key offers for CLECs broadband wireless networks

- 9400 AWY is used in networks which are similar to the standard private networks/business applications of microwave radios:

In very dense area the 9400AWY can be combined with Alcatel LMDS family to provide integrated access solutions.

The 9400 AWY product provide NxE1/NxDS1 direct connections (leased lines applications) of subscribers to avoid to congest the LMDS spectrum in one sector or the connection of subscribers who are out of range with the LMDS cell but whose traffic does not justify the installation of a new cell.

- 9400 AWY is used to provide E3/DS3 inter–connections between Wireless IP base stations or between regional low traffic potential LMDS base stations, in order to provide a cost effective infrastructure transmission solution.

All rights reserved. Passing on and copying of this document, use and communication of its contents not permitted without written authorization from Alcatel.

All rights reserved. Passing on and copying of this document, use and communication of its contents not permitted without written authorization from Alcatel.

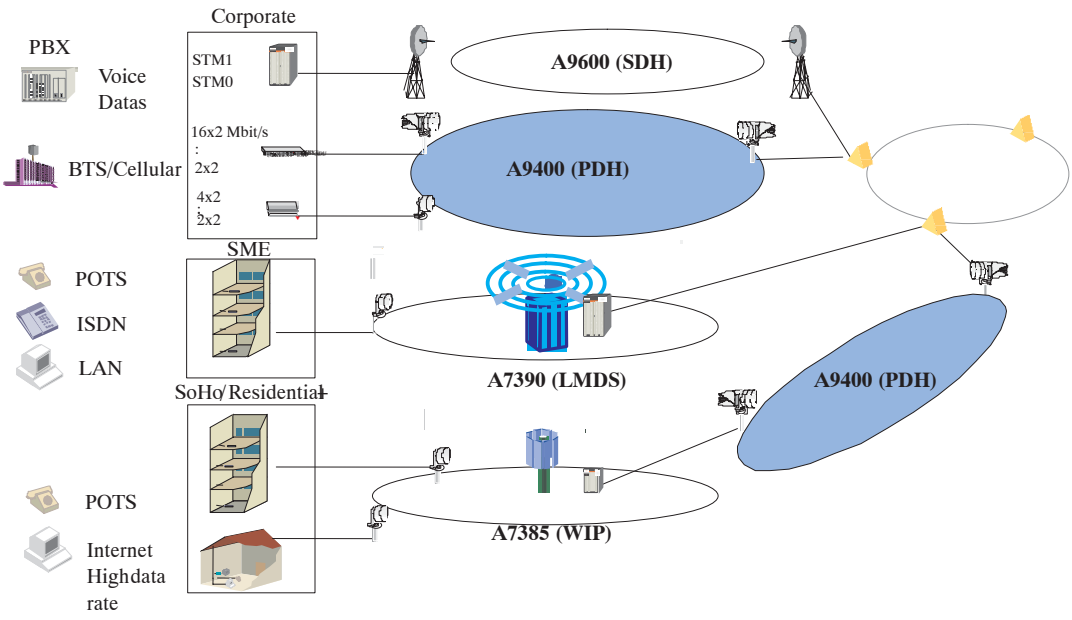

Fig. 4. Alcatel 9400 AWY integration in Wireless IP and LMDS network

1–1.3.3 Private voice/data network

The Alcatel 9400AWY is well suited to implement corporate networks, providing inter–PBX (NxE1/NxDS1) or inter–LAN (E3/DS3) between Universities, Hospitals, Headquarters and branch Office.

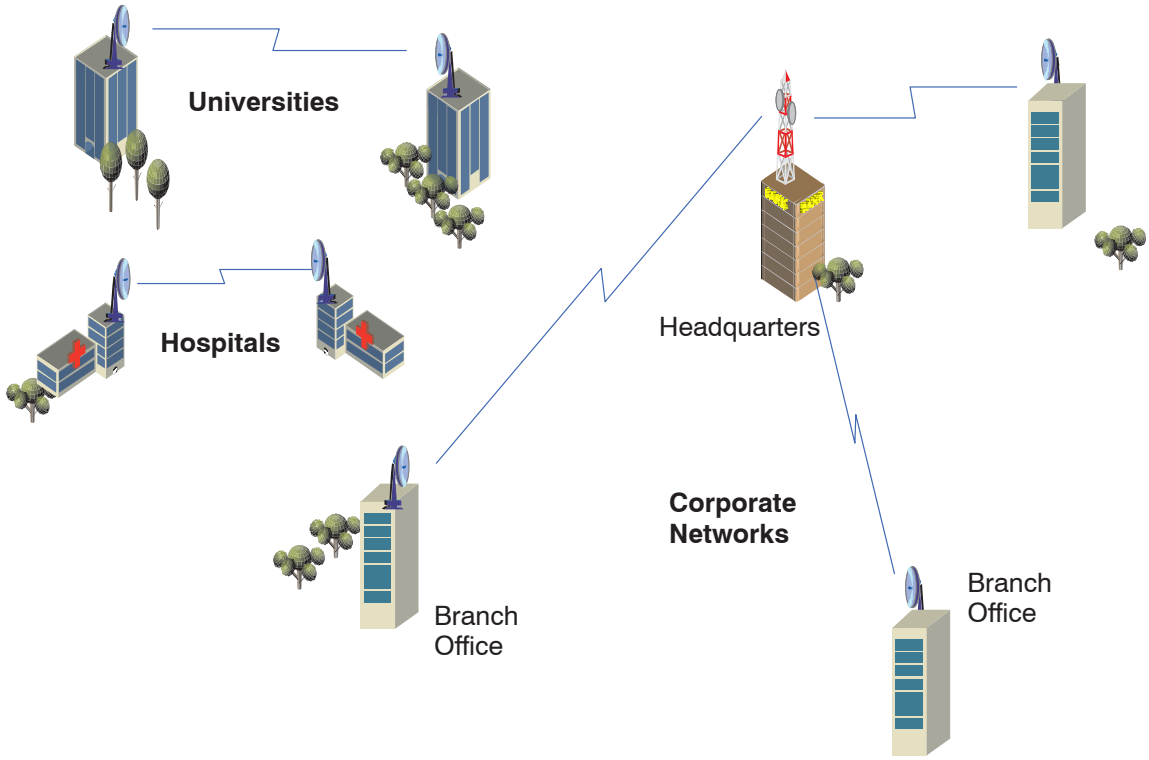

Fig. 5. Alcatel 9400 AWY integration in Wireless IP and LMDS network

1–1.4 User interfaces, service channels and additional interfaces

1–1.4.1 User interface

9400 AWY provides the following kinds of user interfaces:

- up to 16xE1 (2.048 Mbit/s) ITU–T Rec. G.703
- up to 16xDS1 (1.544 Mbit/s) ITU–T Rec. G.703
- 1xE3 (34.368 Mbit/s) ITU–T Rec. G.703
- 1xDS3 (44.736 Mbit/s) ANSI T1.102

Note : E1/DS1 and E3/DS3 are in alternative.

1–1.4.2 Service channels

In addition to the main signals, the 9400 AWY family permits the transmission of the following service channels:

- EOW (IDU access by telephone handset and 2–way party line)
- 1x64 kbit/s G.703 (co–directional) or V.11 (co– or contra–directional)

1–1.4.3 Additional interfaces

The equipment is provided with the following additional interfaces for management and maintenance purposes:

- 10/100BASE–T LAN access for TMN purposes
- F interface for local Craft Terminal connection
- Summarizing/Housekeeping Alarms
- Alarm/status LEDs.

All rights reserved. Passing on and copying of this document, use and communication of its contents not permitted without written authorization from Alcatel.

All rights reserved. Passing on and copying of this document, use and communication of its contents not permitted without written authorization from Alcatel.

1–1.5 Equipment architecture

The 9400 AWY system has been designed in a split mount architecture. It consists of three main parts.

- Indoor Unit (IDU) refer to paragraph 1–1.5.1 on page 26
- Outdoor Unit (ODU) refer to paragraph 1–1.5.2 on page 30
- IDU/ODU cable refer to paragraph 1–1.5.3 on page 29

IDU and ODU are connected with a single standard coaxial cable carrying the main traffic, the remote power supply voltage for the ODU and auxiliary information.

Rack or wall or desk mounting are available for the IDU.

The ODU can be installed on standard poles, wall or pedestal mount, with an appropriate fastening system, which guarantees the coarse and fine pointing, even when a faulty ODU has to be replaced.

The ODU (one or two depending on the configuration 1+0 or 1+1) incorporates the complete RF transceiver and can be associated with an integrated antenna (30 cm or 60 cm diameter) or separate antenna, if a larger diameter is needed. The ODU is capacity–independent and consists of a single cabinet (size and weight independent on frequency) with a solar shield.

The cabinet is a very compact and robust weatherproof (IP 67) container, designed to be compatible with hot and very sunny climatic zones.

The ODU can be rapidly installed on standard poles with an appropriate fastening system. The pole mounting is the same for 1+0 or 1+1 configurations from 13 to 38 GHz.

The ODU is fixed by means of quick latches. This system allows to change the ODU without altering antenna pointing

The pointing of the antenna can be easily performed with the use of a dedicated service kit. This kit, when connected to the ODU, provides the received signal level, and the connection to the other station on the link through a telephone service channel.

1–1.5.1 IDU (Indoor Unit)

The IDU incorporates the base–band processing and offers tributaries interfaces as well as service channel and supervision.

The IDU is frequency–independent (same unit from 13 to 38 GHz)

The IDU is available in “1+0 unprotected configuration” and “1+1 protected configuration”.
The “1+1 configuration” shelf can be subequipped to obtain the “1+0 extendible unprotected configuration”.

The IDU is a single assembly (1U +5 mm high in case of 1+0 Compact version or 2U high in the 1+0 EXT / 1+1 cases).

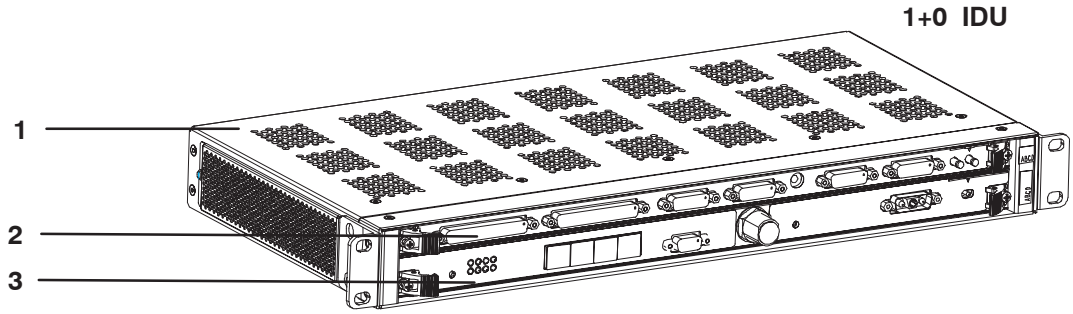

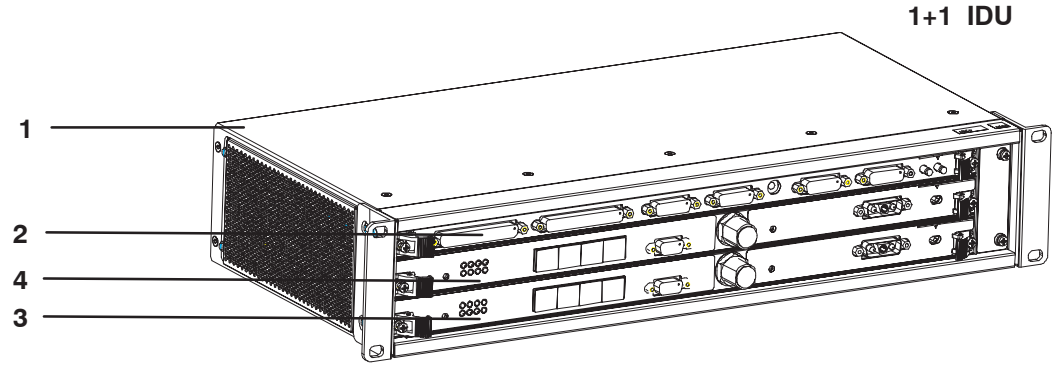

1= IDU subrack

2= IDU Access Unit

3= IDU Main Unit

4= IDU Extension Unit

Fig. 6. “1+0” and “1+1” IDU shelves

All rights reserved. Passing on and copying of this document, use and communication of its contents not permitted without written authorization from Alcatel.

All rights reserved. Passing on and copying of this document, use and communication of its contents not permitted without written authorization from Alcatel.

The 1+0 Compact IDU is made up of the following units:

– Access IDU unit

– Main IDU unit

The 1+1 IDU is made up of the following units:

– Access IDU unit

– Main IDU unit

– Extension IDU unit

– Fans unit.

The units housed inside each IDU carry out the following main functions:

[1] Access IDU unit

It allows access for tributaries, alarms and service channels. It includes transformers to match the tributary impedance and tributary splitting. This unit is common for both 1+0 and 1+1 systems.

[2] Main IDU unit

It includes a DC/DC converter, the Mux/Demux and the cable interface functions for the main channel and a µP implementing the EC and RC functionalities. This unit is common to both 1+0 and 1+1 systems.

The main functions implemented are:

- E1/DS1 tributary management
- E3/DS3 tributary management
- 64 kbit/s service channel management
- Alarms and Housekeeping management
- Telephone and Engineering Order Wire channels management
- Mux/Demux
- Scrambler/Descrambler
- RS coding/decoding
- Interleaving/De–interleaving
- Cable interface.

The Main IDU unit can be configured by CT/OS for the ETSI market (E1 or E3 tributaries) or for the ANSI market (DS1 or DS3 tributaries).

The Main IDU unit contains all the interfaces for external links, but does not contain the connectors for the protected interfaces; these are present on the Access IDU Unit.

Starting from SWP V.1.1.0, an additional plug–in (DATA CARD) could be optionally plugged onto the main IDU implementing Ethernet functionalities.

[3] Flash Card

A FLASH CARD is plugged into the Main board giving the maximum capacity for the tributaries and the modulation type as reported in the following Tab. 2. (5 possible types of Flash card).

Tab. 2. Available Flash cards

NAME	Capacity	Modulation
Full Flexible Flash Card	All	All
16E1DS1 16QAM Flash Card	Up to 16E1DS1	16QAM
4E1 16QAM Flash Card	Up to 4E1	16QAM
16E1DS1 4QAM Flash Card	Up to 16E1DS1	4QAM
4E1DS1 4QAM Flash Card	Up to 4E1/DS1	4QAM

Notes:

1) A 16 QAM Flash card does not allow the transmission of a 4 QAM signal.

2) A 4xE1/DS1 Flash Card does not allow the transmission of a capacity greater than 4xE1/DS1.

3) As far as E3/DS3 tributary rate is concerned, only the Full Flexible Flash card can be selected.

4) The Full Flexible Flash Card allows the transmission of whatever capacity and modulation.

[4] Extension IDU unit

This unit is present in 1+1 systems only and its functions are as those of the Main unit, but for channel 0, except the Equipment Controller function.
Starting from SWP V.1.0.1, an additional plug–in (HSW CARD) can be optionally plugged onto the Extension IDU implementing Hitless Switch functionalities (RPS RX).

[5] Fans unit

For the 1+1 version, due to the dense packing, a fans unit is present; this unit can be easily replaced from the front panel as well as the units above.

[6] Power supply

The PSU function is integrated in the Main/Extension units and can be of two types:

- Floating (48–60) V nom. ± 20% (presently available)
- *Floating full range (24–60) V nom. ± 20% (envisaged in future)*

All rights reserved. Passing on and copying of this document, use and communication of its contents not permitted without written authorization from Alcatel.

All rights reserved. Passing on and copying of this document, use and communication of its contents not permitted without written authorization from Alcatel.

1–1.5.2 ODU (Outdoor Unit)

a) ODU unit

The ODU consists of a cabinet including the modem + transceiver of a channel. The ODU family operates from 13 GHz to 38 GHz. The mechanical structure utilizes an outdoor water–resistant IP67 cabinet (see chapter 2–3 on page 71 for drawings).

The mechanical solution is the same for the 13 to 38 GHz frequency bands, while the only differences among the frequency bands are related to the diplexer and the RF section.
All configurations are available for each frequency band.

The ODU presents one output port at which a single polarization integrated antenna (30 cm or 60 cm diameter) or a waveguide for not integrated antenna connection can be connected.
The ODU is capacity–independent.

The ODU consists of subunits which carry out the following main functions (see Fig. 7. on page 30):

[1] Modem: It consists of a base–band part and an IF part. The main functions are:

- Cable interface: DC splitting, echo cancellation, clock recovery
- HDB3 coding/decoding
- Modulation and demodulation
- Digital to analog conversion
- Analogue filtering
- Up–conversion in Tx side in the frequency range of 1 GHz to 2.1 GHz
- Down–conversion in Rx side from 675 MHz to base band
- Control function for hardware configuration and dialog with the IDU.

[2] Front–End. The main functions are:

- AGC IF amplification
- Up–conversion to the RF Tx channel frequency
- Transmit power control range of 30 dB
- RF loop–back
- Double mixers at Rx side (the frequency of the signal sent to the modem board is 675 MHz whatever the frequency band and shifter).

[3] Synthesizer unit

- The RF LO in the overall frequency range of 3.8 GHz to 5.7 GHz
- The IF LO in the frequency range of 1.0 GHz to 2.1 GHz

[4] Power Supply Unit: it is screwed on the Front End box

[5] Diplexer: it is inserted between the front end and the antenna. Its scope is to filter all interfering signals and harmonics. It consists of two band–pass filters: one for the Rx and one for the Tx. The rejection between these two parts is more than 70 dB. The insertion losses are less than 2 dB.

b) Solar shield

Even if the ODU has been designed to work without solar shield, this one is always delivered with each ODU.

N.B. Note : the ODU is qualified for a room temperature of +55 ^{0}C maximum. In case of solar radiation (1120 W/m2), the maximum room temperature is reduced to +40 ^{0}C (ETS 300 019–2–4.1). It assumes that the protection of the solar shield is 15 ^{0}C.

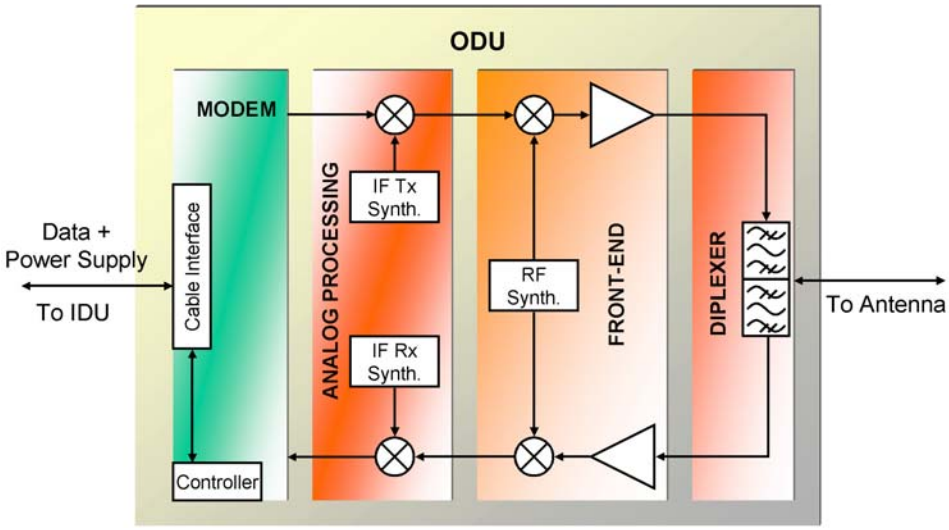

Fig. 7. ODU block diagram

All rights reserved. Passing on and copying of this document, use and communication of its contents not permitted without written authorization from Alcatel.

c) ODU Coupler

The ODU coupler (shown in Fig. 23. on page 84) is used in the following equipment configuration:

- 1+1 HSB
- 1+1 FD CP

The 1+0 configuration is comprised of a simple diplexer inside the cabinet while the protected configurations (1+1) are always comprised of two cabinets and:

- one 3 dB symmetric or 1/10 dB asymmetric coupler for HSB configuration
- one 3 dB symmetric coupler for FD with single polar antenna

The couplers are connected between the cabinets and the antenna.

1–1.5.3 IDU–ODU cable

The connection between the IDU and the ODU is realized with a single coaxial cable and N–50 ohm connectors.
On this cable the following signals are present:

– DC voltage to the remote power supply of the ODU;
– HDB3 Tx signal;
– HDB3 Rx signal.

The HDB3 signal is an aggregate signal including the main signal, auxiliary signal and the IDU–ODU service channels.
The bit rate of the aggregate signal is listed in the following table.

Tab. 3. Bit rate of the IDU–ODU signal on the cable	
ETSI (2 to 16xE1, E3)	39.168 Mbit/s
ANSI (4 to 16xDS1, DS3)	57.120 Mbit/s

The IDU–ODU cable is a standard coaxial cable (Filotex 390998) and allows a **guaranteed** maximum distance between IDU and ODU of 304 m (1000 feet).

All rights reserved. Passing on and copying of this document, use and communication of its contents not permitted without written authorization from Alcatel.

1–1.6 System configurations

The configurations available are:

1) Unprotected configurations (Refer to para. 1–1.6.1 on page 32)

- 1+0 COMPACT
- 1+0 EXTENDABLE

2) Protected configurations (Refer to para. 1–1.6.2 on page 34)

- 1+1 HSB
- 1+1 HSB SD
- 1+1 FD CP
- 1+1 FD AP
- 1+1 FD DA

Note:

CP = Co–polar

AP = Alternate polar

DA = Dual antenna

Tab. 4. 13 to 38 GHz 4/16 QAM configurations

Configuration	ODU cabinet	RF channeling	Coupler	Antenna
1+0 COMPACT 1+0 EXTENDABLE	1		NO	1
1+1 HSB	2		3 dB Symmetric or 1/10 dB asymmetric	1
1+1 HSB SD	2		NO	2
1+1 FD CP	2		3 dB Symmetric	1
1+1 FD AP	2	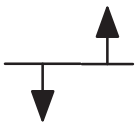	NO	1
1+1 FD DA	2	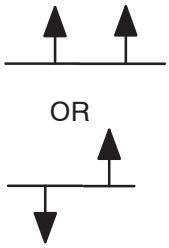	NO	2

1–1.6.1 Unprotected configurations

The 1+0 unprotected terminal is made up of the following elements:

– One **Outdoor Unit (ODU)** incorporating the complete RF transceiver (modem, RF units, branching filter) and an integrated or separated antenna.

  The ODU is capacity–independent.

– One **Indoor Unit (IDU)** incorporating the base–band processing and offering tributaries interfacing as well as service channel and supervision.

  The IDU is frequency–independent.

– A 300 m long **single coaxial cable**.

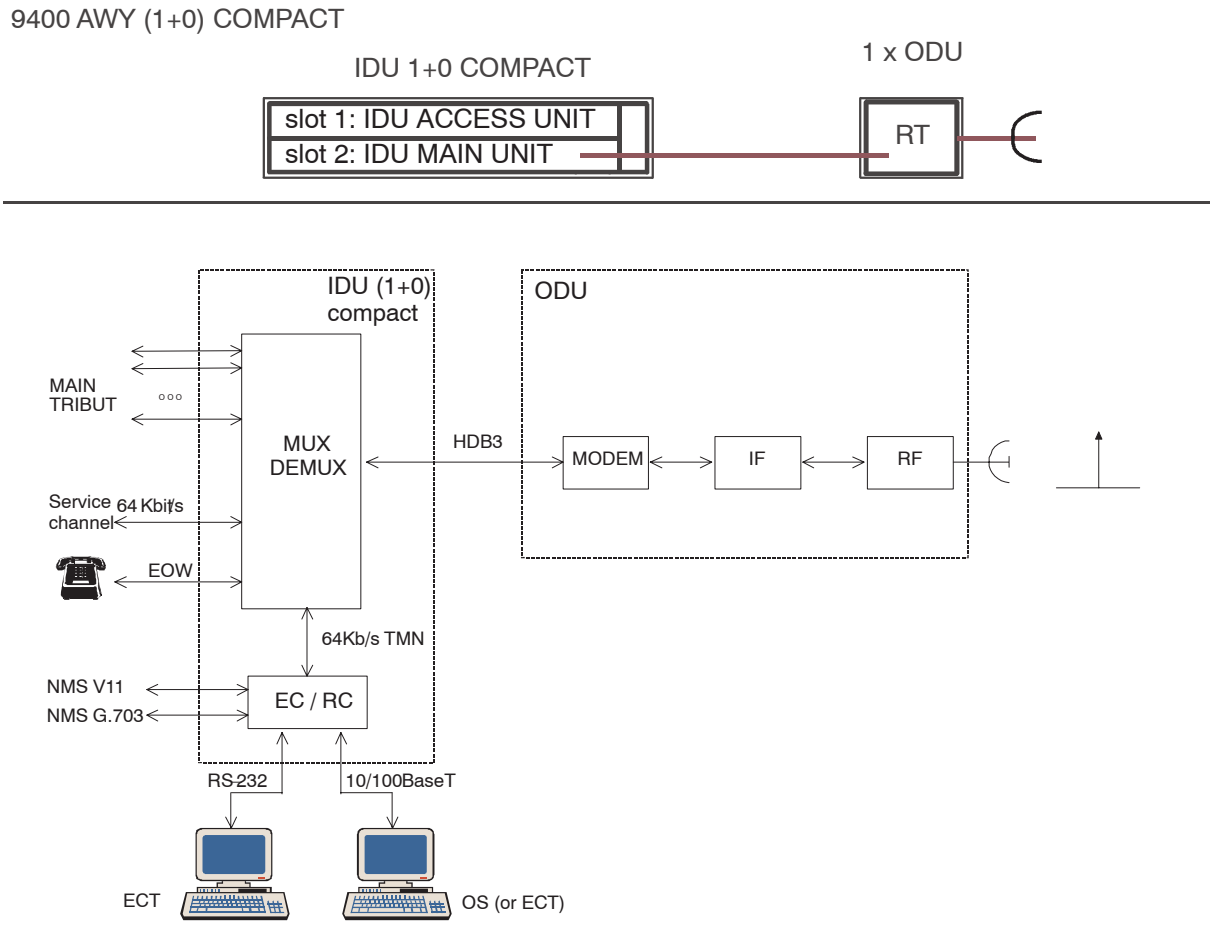

N.B. the detailed station layout of this configuration is given in para.2–7.4.1 on page 123

Fig. 8. Equipment and block diagrams of 9400AWY 1+0 COMPACT

All rights reserved. Passing on and copying of this document, use and communication of its contents not permitted without written authorization from Alcatel.

All rights reserved. Passing on and copying of this document, use and communication of its contents not permitted without written authorization from Alcatel.

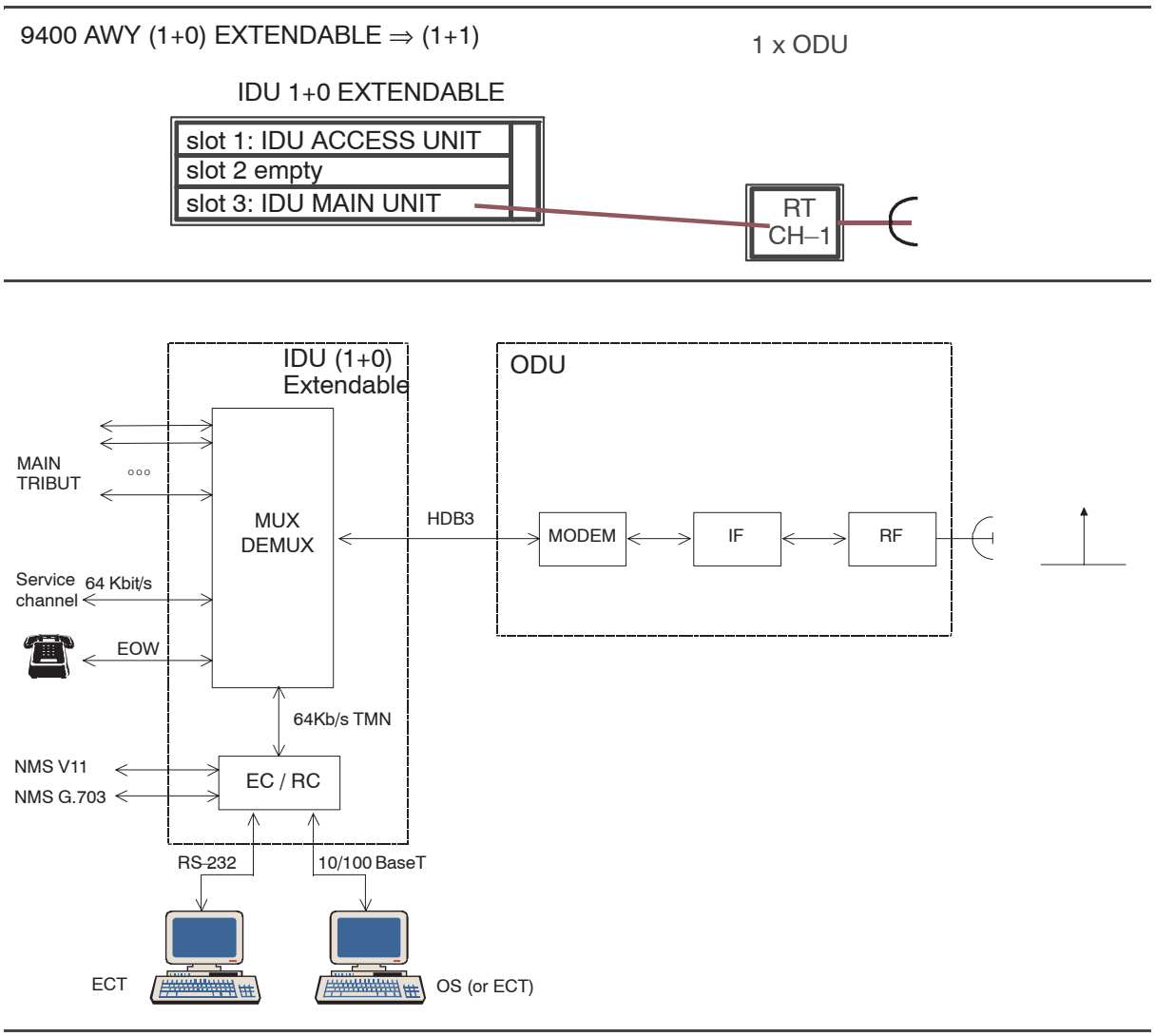

N.B. the detailed station layout of this configuration is given in para.2–7.4.2 on page 124

Fig. 9. Equipment and block diagrams of 9400AWY 1+0 EXTENDABLE

1–1.6.2 Protected configurations

The protected configurations allow to protect the most critical transmission paths.

The following implementations are available:

– 1+1 Hot Stand By (HSB):
  - with Space Diversity (SD) see Fig. 10. herebelow
  - or without space diversity see Fig. 11. on page 35

– 1+1 with Frequency Diversity (FD):
  - FD double antenna CP or AP see Fig. 12. on page 36
  - FD one antenna CP see Fig. 13. on page 37
  - FD one antenna AP see Fig. 14. on page 38

The 1+1 configurations include an EPS protection (in Tx and Rx side) as standard feature.

In the protected configuration the main traffic and service channels are automatically protected.

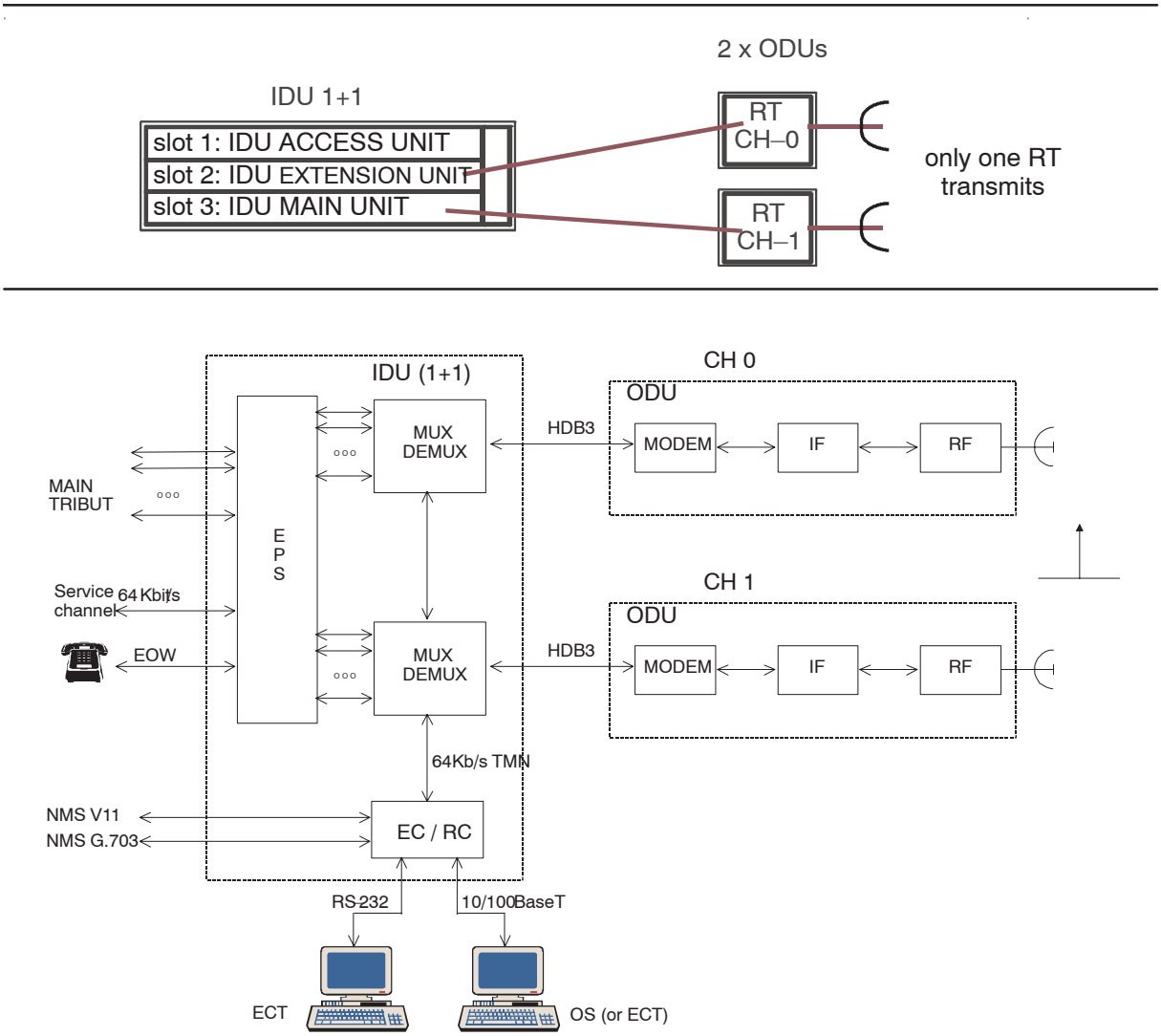

N.B. the detailed station layout of this configuration is given in para.2–7.4.3 on page 125

Fig. 10. Equipment and block diagrams of 9400AWY 1+1 HSB SD

All rights reserved. Passing on and copying of this document, use and communication of its contents not permitted without written authorization from Alcatel.

All rights reserved. Passing on and copying of this document, use and communication of its contents not permitted without written authorization from Alcatel.

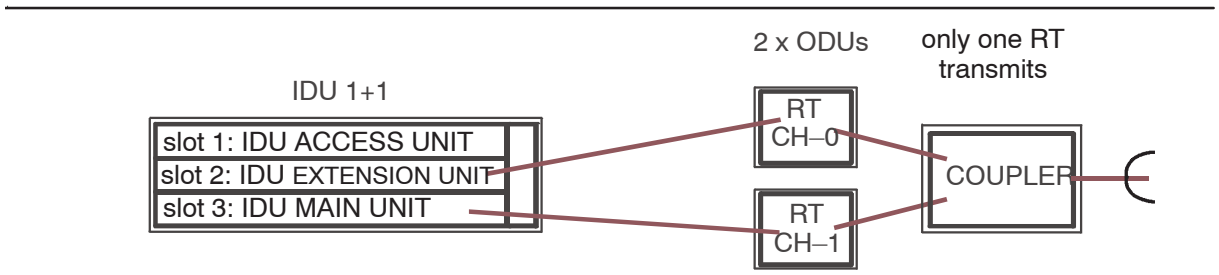

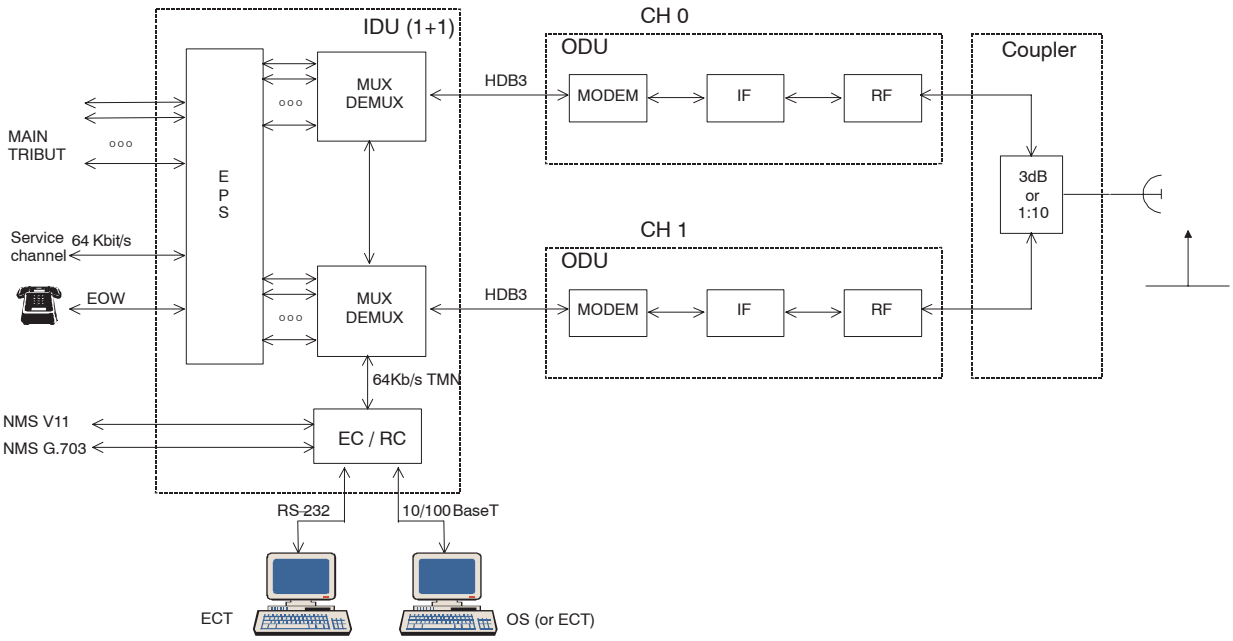

N.B. the detailed station layout of this configuration is given in para.2–7.4.4 on page 126

Fig. 11. Equipment and block diagrams of 9400AWY 1+1 HSB (one antenna)

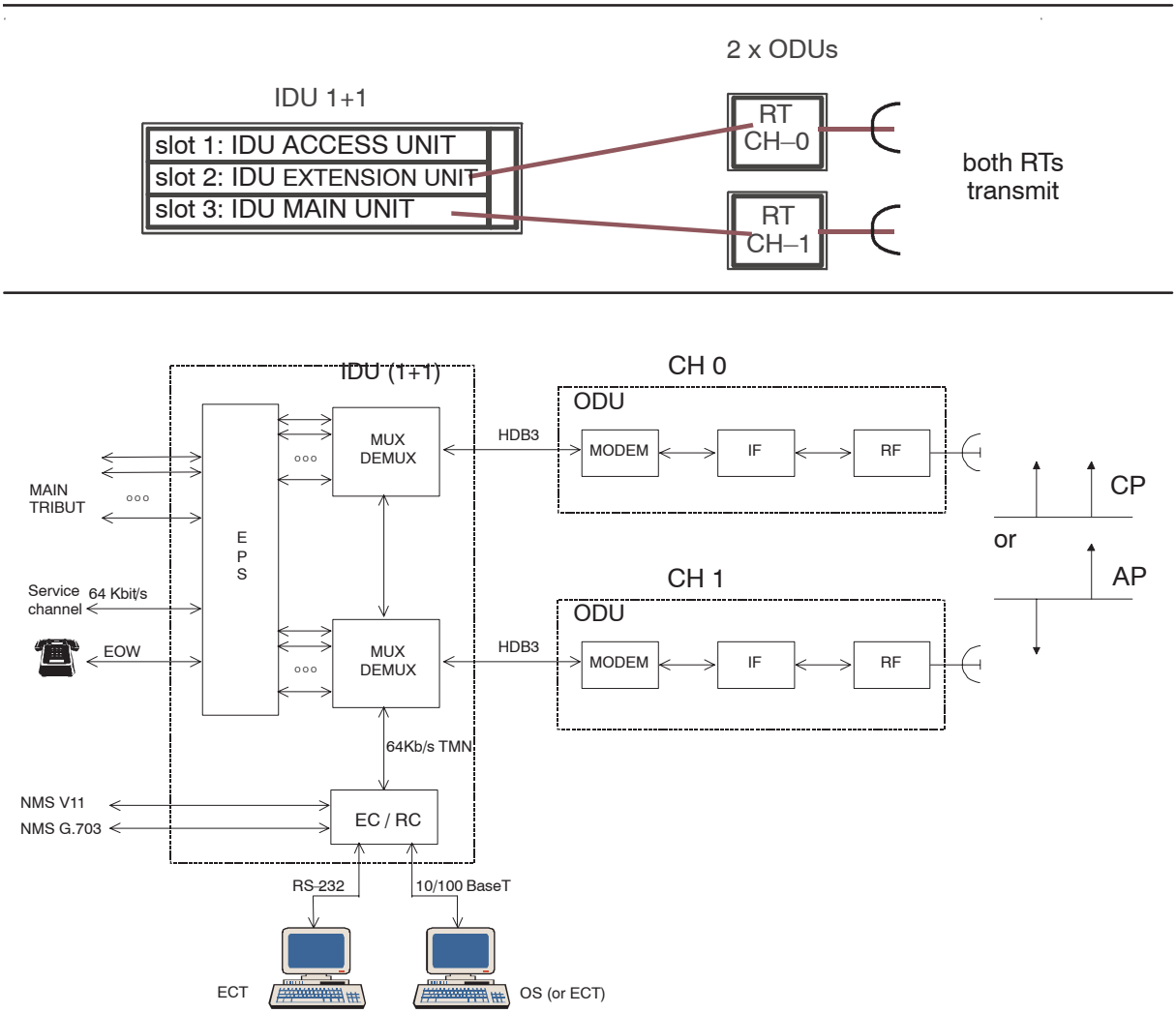

N.B. the detailed station layout of this configuration is given in para.2–7.4.3 on page 125

Fig. 12. Equipment and block diagrams of 9400AWY 1+1 FD Double Antenna CP or AP

All rights reserved. Passing on and copying of this document, use and communication of its contents not permitted without written authorization from Alcatel.

All rights reserved. Passing on and copying of this document, use and communication of its contents not permitted without written authorization from Alcatel.

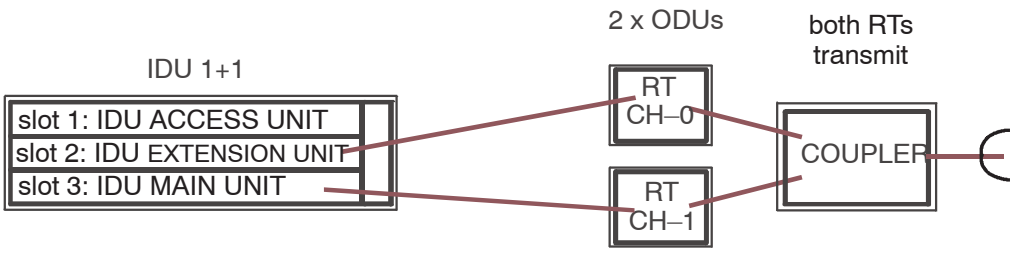

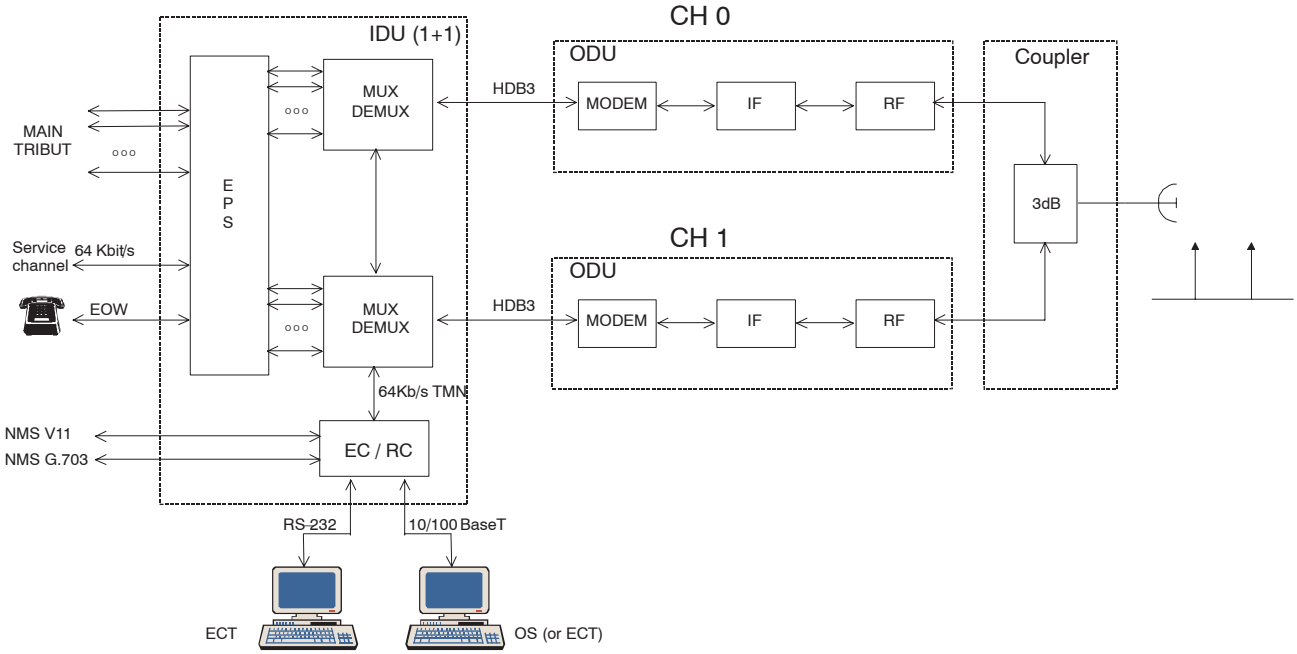

N.B. the detailed station layout of this configuration is given in para.2–7.4.4 on page 126

Fig. 13. Equipment and block diagrams of 9400AWY 1+1 FD one antenna CP

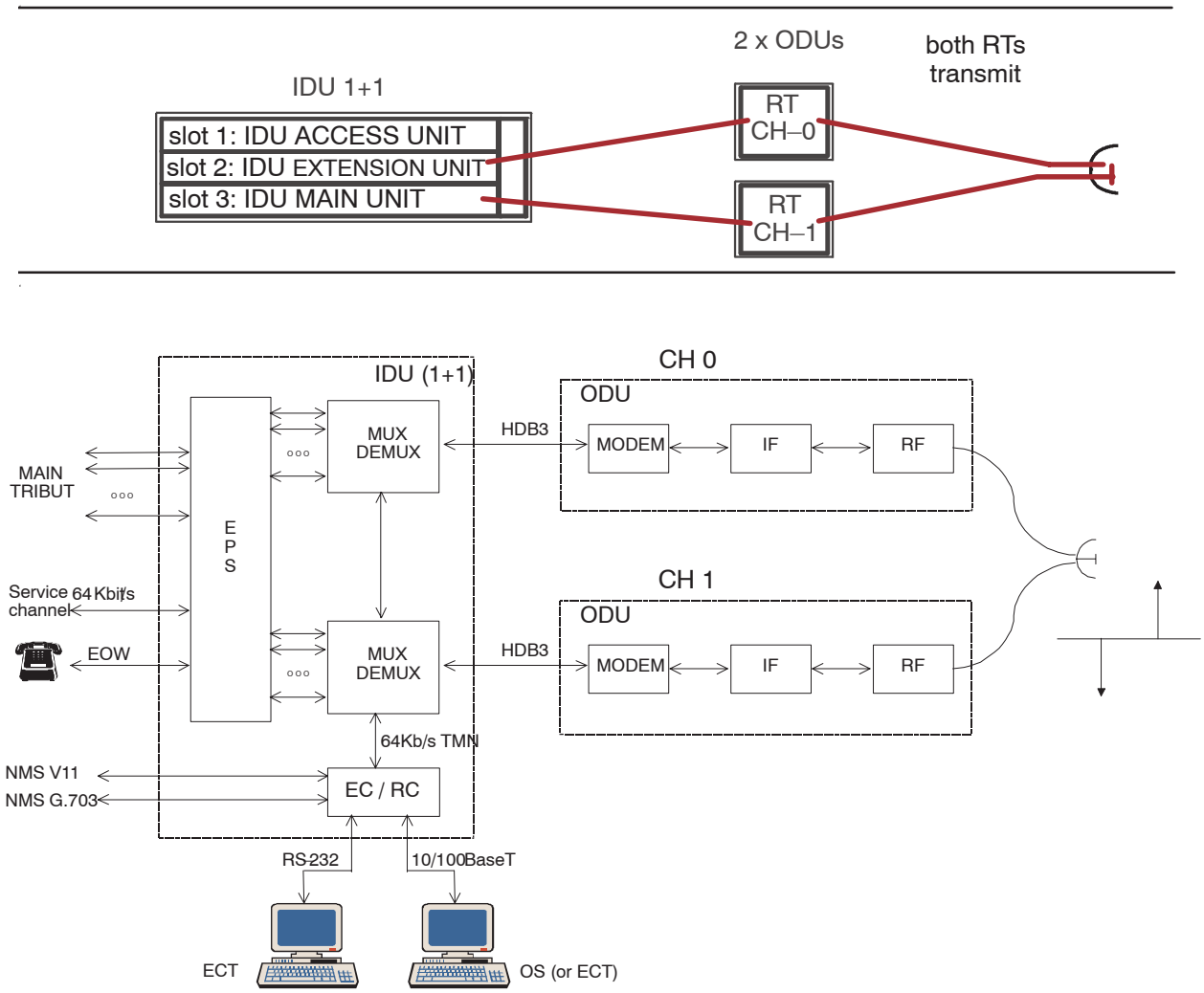

N.B. the detailed station layout of this configuration is given in para.2–7.4.5 on page 127

Fig. 14. Equipment and block diagrams of 9400AWY 1+1 FD one antenna AP

All rights reserved. Passing on and copying of this document, use and communication of its contents not permitted without written authorization from Alcatel.

All rights reserved. Passing on and copying of this document, use and communication of its contents not permitted without written authorization from Alcatel.

1–2 TECHNICAL SPECIFICATIONS

Data indicated in the handbook must be considered as **standard values**
Data indicated in the contract must be considered as **guaranteed values**

This chapter describes the technical characteristics of the 9400AWY in the following RF band configurations:

Tab. 5. 9400 AWY family

SYSTEM	BAND (GHz)
9411AWY	11
9413AWY	13
9415AWY	15
9418AWY	18
9423AWY	23
9425AWY	25
9428AWY	28
9432AWY	32
9438AWY	38

This chapter is organized as follows:

– **General Characteristics** on page 40, including:
  - **Reference system standards** on page 41
  - **RF channeling** on page 42
  - **Transmitted Power at antenna port (ETSI and FCC)** on page 43
  - **99% power channel bandwidth and Emission Designator** on page 44
  - **ETSI System Characteristics** on page 45
  - **FCC System Characteristics** on page 49
  - **Antenna gain (typical gain at mid–band)** on page 53
  - **Switching system** on page 53
– **Tributary interfaces** on page 54
– **Modem** on page 54
– **Maximum capacity and Modulation type** on page 54
– **IDU–ODU cable** on page 54
– **Man–machine interface** on page 55
– **Alarms** on page 55
– **Power supply** on page 55
– **Mechanical characteristics** on page 55
– **Environmental conditions** on page 56
– **Electro–magnetic compatibility / safety** on page 56

1–2.1 General Characteristics

Version	SPLIT MOUNT (IDU+ODU)
Station type	Terminal
Configuration	1+0 Compact / 1+0 Exp. / 1+1HSB / 1+1 FD / 1+1 FD DA
Reference standard (system)	Refer to para. 1–2.1.1 page 41
Transmission capacity	ETSI: 2xE1, 4xE1, 8xE1, 16xE1, E3 FCC: 4xDS1, 8xDS1, 16xDS1, DS3
RF channel spacing	Refer to para. 1–2.1.2 page 42
Tunability	Refer to para. 1–2.1.3 page 43
Transmitted power	Refer to para. 1–2.1.3 page 43
99% power channel bandwidth and Emission Designator	Refer to para. 1–2.1.4 page 44
ATPC range	20 dB (Pmax / Pmax–20 dB)
RTPC range	30 dB (Pmax / Pmax–30 dB) (ETSI mask compliance till Pmax–20 dB)
Tx level with Tx mute ON	< –30 dBm
RF frequency stability	± 10 ppm
Synthesizer step	250 kHz
RF spectrum masks	Compliant with the relevant ETSI/FCC standards
Spurious emissions	Compliant with the relevant ETSI/FCC standards Compliant with ERC Rec. 74–01
BER receiver threshold	Refer to para. 1–2.1.5 page 45 (ETSI) or 1–2.1.6 page 49 (FCC)
System gain	
Antenna gain	Refer to para. 1–2.1.7 page 53
Rx max input level	–20 dBm (for a BER of 10^{-3})
Switching system	Refer to para. 1–2.1.8 page 53
User service channels	SC #1 – DATA CHANNEL – 1x64 kbit/s data channel configurable alternatively as one of the following modes: • G.703 co–directional • V.11 co–directional • V.11 contradirectional
	SC #2 – EOW Omnibus voice channel 64 kbit/s DTMF (Q.23) + 4–wire party line (2 ways)
NMS channels	– NMS–V.11: 1x64 kbit/s V.11 co–directional for TMN (port 1) – NMS–G.703: 1x64 kbit/s G.703 co–directional for TMN (port 2) – NMS–RF: 1x64 kbit/s radio channel for TMN (internal to the radio frame)

All rights reserved. Passing on and copying of this document, use and communication of its contents not permitted without written authorization from Alcatel.

All rights reserved. Passing on and copying of this document, use and communication of its contents not permitted without written authorization from Alcatel.

1–2.1.1 Reference system standards

ETSI standard					
Equipment	**ETSI reference standard**	**Frequency band (GHz)**	**Frequency range (GHz)**	**Channeling**	**Standard Tx/Rx separation (MHz)**
9411 AWY 4QAM	t.b.d.	11 GHz	10.7–11.7	t.b.d.	530
9411 AWY16QAM	t.b.d.				
9413 AWY 4QAM	EN 301 128 Class 1	13 GHz	12.75–13.25	ERC 12–02 ITU–R Rec 497	266
9413 AWY16QAM	EN 301 128 Class 2				
9415 AWY 4QAM	EN 301 128 Class 1	15 GHz	14.4–15.35	MEXICO ERC 12–07 ITU–R Rec 636	315 728 420,490,644
9415 AWY 16QAM	EN 301 128 Class 2				
9418 AWY 4QAM	EN 301 128 Class 1	18 GHz	17.7–19.7	ERC 12–03 ITU–R Rec 595	1008,1010 340,1560
9418 AWY 16QAM					
9423 AWY 4QAM	EN 300 198 Class 2	23 GHz	21.2–23.6	ERC 13–02 annex A ITU–R Rec 637	1008, 1200,1232
9423 AWY 16QAM	EN 300 198 Class 4				
9425 AWY 4QAM	EN 300 431 Class 2	25 GHz	24.5–26.5	ERC 13–02 ITU–R Rec. 748	1008
9425 AWY 16QAM	EN 300 431 Class 4				
9428 AWY 4QAM	EN 300 431 Class 2	28 GHz	27.5–29.5	ERC 13–02 ITU–R Rec. 748	1008
9428 AWY 16QAM	EN 300 431 Class 4				
9432 AWY 4QAM	EN 300 431 Class 2	32 GHz	31.8–33.4	ERC 13–02 ITU–R Rec. 748	812
9432 AWY 16QAM	EN 300 431 Class 4				
9438 AWY 4QAM	EN 300 197 Class 2	38 GHz	37–39.5	ERC 12–01 ITU–R Rec 749	1260
9438 AWY16QAM	EN 300 197 Class 4				

FCC standards				
Designation	**Band (GHz)**	**Frequency (GHz)**	**Frequency plans**	**Standard (Note 1) Tx/Rx separation (MHz)**
9411 AWY	11	10.7–11.7	t.b.d.	500/490
9415 AWY	15	14.4–15.35	NTIA–US SRSP–314.5–CDN	640 475
9418 AWY	18	17.7–19.7	FCC 101/SRSP317.7 FCC	1560 420,1580
9423 AWY	23	21.2–23.6	FCC 02–218	1200
9424 AWY	24	24.25–25.25	Teligent–US	800
9428 AWY	28	27.35–31.225	LMDS–US LMCS–CDN	500,525,1375,3200
9431 AWY	31	31.0–31.3	LMDS–US	225
9438 AWY	38	38.6–40.0	FCC 101/SRSP317.7	700
Note 1: Other separations are available on request.				

1–2.1.2 RF channelling

ETSI RF CHANNELING				
Capacity (Mbit/s)	2x2	4x2	8x2	16x2 /34
RF Channeling with 4 QAM (MHz)	3.5	7	14	28
RF Channeling with 16 QAM (MHz)		3.5	7	14

FCC RF CHANNELING				
Capacity (Mbit/s)	4x1.5	8x1.5	16x1.5	45
RF Channeling with 4 QAM (MHz)	5	10	20	40
RF Channeling with 16 QAM (MHz)		5	10	20

All rights reserved. Passing on and copying of this document, use and communication of its contents not permitted without written authorization from Alcatel.

All rights reserved. Passing on and copying of this document, use and communication of its contents not permitted without written authorization from Alcatel.

1–2.1.3 Transmitted power at antenna port (ETSI and FCC)

Tolerance:
- ±0.5 dB at ambient temperature
- ±1.5 dB in temperature range –33°C to +55°C

IN–FIELD TUNABILITY RANGE				
Equipment	**Tx/Rx separation (MHz)**	**Tunability (MHz)**	**Output power (dBm) (Note 1)**	**Output power setting (dBm)** **N.B.** ATPC range = 20 dBm RTPC range = 30 dBm
9411 AWY 4QAM	500/490, 530	t.b.d.	23	ATPC : +23 to +3 dBm RTPC : +23 to –7 dBm with 1 dB step
9411 AWY 16QAM			20	ATPC : +20 to +0 dBm RTPC : +20 to –10 dBm with 1 dB step
9413 AWY 4QAM	266	116	24	ATPC : +24 to +4 dBm RTPC : +24 to –6 dBm with 1 dB step
9413 AWY 16QAM			20	ATPC : +20 to +0 dBm RTPC : +20 to –10 dBm with 1 dB step
9415 AWY 4QAM	728, 315, 420, 490, 475 **(*)** **(*)** values for 475 referred to the standard version (see Tab. 22. on page 74)	220	24	ATPC : +24 to +4 dBm RTPC : +24 to –6 dBm with 1 dB step
			21	ATPC : +21 to +1 dBm RTPC : +21 to –9 dBm with 1 dB step
9415 AWY16QAM			21	ATPC : +21 to +1 dBm RTPC : +21 to –9 dBm with 1 dB step
			20	ATPC : +20 to +0 dBm RTPC : +20 to –10 dBm with 1 dB step
9418 AWY 4QAM	1008,1010,340, 1560	480	22	ATPC : +22 to +2 dBm RTPC : +22 to –8 dBm with 1 dB step
9418 AWY 16 QAM			19	ATPC : +19 to –1 dBm RTPC : +19 to –11 dBm with 1 dB step
9423 AWY 4QAM	1008,1197,1200, 1232	500	19	ATPC : +19 to –1 dBm RTPC : +19 to –11 dBm with 1 dB step
9423 AWY 16QAM			16	ATPC : +16 to –4 dBm RTPC : +16 to –14 dBm with 1 dB step
9425 AWY 4QAM	1008	450	17	ATPC : +17 to –3 dBm RTPC : +17 to –13 dBm with 1 dB step
9425 AWY 16QAM			14	ATPC : +14 to –6 dBm RTPC : +14 to –16 dBm with 1 dB step
9428 AWY 4QAM	1008	450	16	ATPC : +16 to –4 dBm RTPC : +16 to –14 dBm with 1 dB step
9428 AWY 16QAM			13	ATPC : +13 to –7 dBm RTPC : +13 to –17 dBm with 1 dB step

Equipment	Tx/Rx separation (MHz)	Tunability (MHz)	Output power (dBm) (Note 1)	Output power setting (dBm) N.B. ATPC range = 20 dBm RTPC range = 30 dBm
9432 AWY 4QAM	1008	450	16	ATPC : +16 to –4 dBm RTPC : +16 to –14 dBm with 1 dB step
9432 AWY 16QAM			13	ATPC : +13 to –7 dBm RTPC : +13 to –17 dBm with 1 dB step
9438 AWY 4QAM	1260	560	16	ATPC : +16 to –4 dBm RTPC : +16 to –14 dBm with 1 dB step
9438 AWY 16QAM	1260	560	13	ATPC : +13 to –7 dBm RTPC : +13 to –17 dBm with 1 dB step
Note 1: Output power at antenna port.				

1–2.1.4 99% power channel bandwidth and Emission Designator

Radio Type	99% Power Channel Bandwidth [MHz]	FCC Channel Bandwidth Rule part 101 [MHz]	Emission Designator	ITU–R/CEPT Rec. Channel Bandwidth [MHz]	Emission Designator
9400 AWY 4QAM 2E1	2,8			3,5	3M5D7W
9400 AWY 4QAM 4E1	5,5			7	7M0D7W
9400 AWY 4QAM 4DS1	4,1	5	5M00D7W		
9400 AWY 4QAM 8E1	10,9			14	14M0D7W
9400 AWY 4QAM 8DS1	8,1	10	10M0D7W		
9400 AWY 4QAM 16E1	21,7			28	28M0D7W
9400 AWY 4QAM 16DS1	16,1	20	20M0D7W		
9400 AWY 4QAM E3	21,7			28	28M0D7W
9400 AWY 4QAM DS3	32	40	40M0D7W		
9400 AWY 16QAM 4E1	2,8			3,5	3M5D7W
9400 AWY 16QAM 8E1	5,5			7	7M0D7W
9400 AWY 16QAM 8DS1	4,1	5	5M0D7W		
9400 AWY 16QAM 16E1	10,9			14	14M0D7W
9400 AWY 16QAM 16DS1	8,1	10	10M0D7W		
9400 AWY 16QAM E3	10,9			14	14M0D7W
9400 AWY 16QAM DS3	16,1	20	20M0D7W		

All rights reserved. Passing on and copying of this document, use and communication of its contents not permitted without written authorization from Alcatel.

All rights reserved. Passing on and copying of this document, use and communication of its contents not permitted without written authorization from Alcatel.

1–2.1.5 ETSI System Characteristics

Data is split into following Tab. 6. thru' Tab. 9. according to capacity and BER value.

Tab. 6. ETSI System Characteristics 16E1–E3 8E1 with BER 10^{-3}

	GHz	11	13	15	18	23	24/25	28/29	31/32	38
	QAM	4 16	4 16	4 16	4 16	4 16	4 16	4 16	4 16	4 16
Guaranteed Characteristic										
TRANSMITTER OUTPUT POWER (dBm) (STANDARD with ATPC) dBm at antenna port	4	24	24	24	22	19	17	16	16	16
	16	21	20	20	19	16	14	13	13	13
10–3 BER THR 16xE1–E3 (Received power)dBm At Antenna Port	4	–85	–84	–84	–82	–82	–81	–81	–80	–80
	16	–81	–80	–80	–78	–78	–77	–77	–76	–76
10–3 BER THR 8xE1 (Received power) dBm At Antenna Port	4	–88	–87	–87	–85	–85	–84	–84	–83	–83
	16	–84	–83	–81	–81	–81	–80	–79	–78	–78
Net System Gain dB (with branching losses and with ATPC) 10–3TH 16xE1–E3 –1+0 At Antenna Port	4	109	108	108	104	101	98	97	96	96
	16	102	100	100	97	94	91	90	89	89
Net System Gain dB (with branching losses and with ATPC) 10–3TH 8xE1 –1+0 At Antenna Port	4	112	111	111	107	104	101	100	99	99
	16	105	103	101	100	97	94	92	91	91
Typical Characteristic										
MAX INPUT POWER 10–3 BER (Received dBm) at antenna Port	4	–15	–15	–15	–15	–15	–15	–15	–15	–15
	16	–20	–20	–20	–20	–20	–20	–20	–20	–20
BACKGROUND BER at PRx nom. Level=–35dBm Referred to Antenna Port		E–12	E–12	E–12	E–12	E–12	E–12	E–12	E–12	E–12

Transmitted Value Tolerance:

– ± 0,5 dB Ambient Temperature

– ± 2 dB Temperature Range —> – 33°C ÷ + 55°C /ODU

Tab. 7. ETSI System Characteristics 16E1–E3 8E1 BER 10^{-6}

	GHz	11	13	15	18	23	24/25	28/29	31/32	38
	QAM	4 16	4 16	4 16	4 16	4 16	4 16	4 16	4 16	4 16
Guaranteed Characteristic										
TRANSMITTER OUTPUT POWER (dBm) (STANDARD With ATPC) dBm At Antenna Port	4	24	24	24	22	19	17	16	16	16
	16	21	20	20	19	16	14	13	13	13
10–6 BER THR 16xE1–E3 (Received power)dBm At Antenna Port	4	–83	–82	–82	–80	–80	–79	–79	–78	–78
	16	–79	–78	–78	–76	–76	–75	–75	–74	–74
10–6 BER THR 8xE1 (Received power) dBm At Antenna Port	4	–86	–85	–85	–83	–83	–82	–82	–81	–81
	16	–82	–81	–79	–79	–79	–78	–77	–76	–76
Net System Gain dB (with branching losses and with ATPC) 10–6TH 16xE1–E3 –1+0 At Antenna Port	4	107	106	106	102	99	96	95	94	94
	16	100	98	98	95	92	89	88	87	87
Net System Gain dB (with branching losses and with ATPC) 10–6TH 8xE1 –1+0 At Antenna Port	4	110	109	109	105	102	99	98	97	97
	16	103	101	99	98	95	92	90	89	89
Typical Characteristic										
MAX INPUT POWER 10–6 BER (Received dBm) at antenna Port	4	–15	–15	–15	–15	–15	–15	–15	–15	–15
	16	–20	–20	–20	–20	–20	–20	–20	–20	–20
BACKGROUND BER at PRx nom. Level=–35dBm Referred to Antenna Port		E–12	E–12	E–12	E–12	E–12	E–12	E–12	E–12	E–12

Transmitted Value Tolerance:

– ± 0,5 dB Ambient Temperature

– ± 2 dB Temperature Range —> – 33°C ÷ + 55°C /ODU

All rights reserved. Passing on and copying of this document, use and communication of its contents not permitted without written authorization from Alcatel.

All rights reserved. Passing on and copying of this document, use and communication of its contents not permitted without written authorization from Alcatel.

Tab. 8. ETSI System Characteristics 4E1 2E1 BER 10^{-3}

	GHz	11	13	15	18	23	24/25	28/29	31/32	38
	QAM	4 16	4 16	4 16	4 16	4 16	4 16	4 16	4 16	4 16
Guaranteed Characteristic										
TRANSMITTER OUTPUT POWER (dBm) (STANDARD With ATPC) dBm At Antenna Port	4	24	24	24	22	19	17	16	16	16
	16	21	20	20	19	16	14	13	13	13
10–3 BER THR 4xE1 (Received power)dBm At Antenna Port	4	–91	–90	–90	–88	–88	–87	–87	–86	–86
	16	–87	–86	–86	–84	–83	–82	–81	–79	–79
10–3 BER THR 2xE1 (Received power) dBm At Antenna Port	4	–94	–93	–93	–91	–91	–90	–90	–89	–89
	16									
Net System Gain dB (with branching losses and with ATPC) 10–3TH 4xE1 –1+0 At Antenna Port	4	115	114	114	110	107	104	103	102	102
	16	108	106	106	103	99	96	94	92	92
Net System Gain dB (with branching losses and with ATPC) 10–3TH 2xE1 At Antenna Port	4	118	117	117	113	110	107	106	105	105
	16									
Typical Characteristic										
MAX INPUT POWER 10–3 BER (Received dBm) at antenna Port	4	–15	–15	–15	–15	–15	–15	–15	–15	–15
	16	–20	–20	–20	–20	–20	–20	–20	–20	–20
BACKGROUND BER at PRx nom. Level=–35dBm Referred to Antenna Port		E–12	E–12	E–12	E–12	E–12	E–12	E–12	E–12	E–12

Transmitted Value Tolerance:

- ± 0,5 dB Ambient Temperature
- ± 2 dB Temperature Range —> – 33°C ÷ + 55°C /ODU

Tab. 9. ETSI System Characteristics 4E1 2E1 BER 10^{-6}

	GHz	11	13	15	18	23	24/25	28/29	31/32	38
	QAM	4 16	4 16	4 16	4 16	4 16	4 16	4 16	4 16	4 16
Guaranteed Characteristic										
TRANSMITTER OUTPUT POWER (dBm) (STANDARD With ATPC) dBm At Antenna Port	4	24	24	24	22	19	17	16	16	16
	16	21	20	20	19	16	14	13	13	13
10–6 BER THR 4xE1 (Received power) dBm At Antenna Port	4	–89	–88	–88	–86	–86	–85	–85	–84	–84
	16	–85	–84	–84	–82	–82	–81	–81	–80	–80
10–6 BER THR 2xE1 (Received power) dBm At Antenna Port	4	–92	–91	–91	–89	–89	–88	–88	–87	–87
	16									
Net System Gain dB (with branching losses and with ATPC) 10–6TH 4xE1 –1+0 At Antenna Port	4	113	112	112	108	105	102	101	100	100
	16	106	104	104	101	98	95	94	93	93
Net System Gain dB (with branching losses and with ATPC) 10–6TH 2xE1 At Antenna Port	4	116	115	115	111	108	105	104	103	103
	16									
Typical Characteristic										
MAX INPUT POWER 10–6 BER (Received dBm) at antenna Port	4	–15	–15	–15	–15	–15	–15	–15	–15	–15
	16	–20	–20	–20	–20	–20	–20	–20	–20	–20
BACKGROUND BER at PRx nom. Level=–35dBm Referred to Antenna Port		E–12	E–12	E–12	E–12	E–12	E–12	E–12	E–12	E–12

Transmitted Value Tolerance:

– ± 0,5 dB Ambient Temperature

– ± 2 dB Temperature Range —> – 33°C ÷ + 55°C /ODU

All rights reserved. Passing on and copying of this document, use and communication of its contents not permitted without written authorization from Alcatel.

All rights reserved. Passing on and copying of this document, use and communication of its contents not permitted without written authorization from Alcatel.

1–2.1.6 FCC System Characteristics

Data is split into following Tab. 10. thru' Tab. 13. according to capacity and BER value.

Tab. 10. FCC System Characteristics 16DS1 DS3 8DS1 BER 10^{-3}

	GHz	11	13	15	18	23	24/25	28/29	31/32	38
	QAM	4 16	4 16	4 16	4 16	4 16	4 16	4 16	4 16	4 16
Guaranteed Characteristic										
TRANSMITTER OUTPUT POWER (dBm) (STANDARD With ATPC) dBm At Antenna Port	4	24	24	24	22	19	17	16	16	16
	16	21	20	20	19	16	14	13	13	13
10–3 BER THR 16xDS1 (Received power)dBm At Antenna Port	4	–86	–85	–85	–83	–83	–82	–82	–81	–79
	16	–82	–81	–81	–79	–79	–78	–77	–76	–75
10–3 BER THR DS3 (Received power) dBm At Antenna Port	4	–83	–82	–82	–80	–80	–79	–79	–78	–76
	16	–79	–78	–78	–76	–76	–75	–75	–74	–72
10–3 BER THR 8xDS1 (Received power) dBm At Antenna Port	4	–89	–88	–88	–86	–86	–85	–85	–84	–82
	16	–85	–84	–84	–81	–81	–80	–79	–77	–78
Net System Gain dB (with branching losses and with ATPC) 10–3TH 16xDS1 –1+0 At Antenna Port	4	110	109	109	105	102	99	98	97	95
	16	103	101	101	98	95	92	90	89	88
Net System Gain dB (with branching losses and with ATPC) 10–3TH DS3 –1+0 At Antenna Port	4	107	106	106	102	99	96	95	94	92
	16	100	98	98	95	92	89	87	86	85
Net System Gain dB (with branching losses and with ATPC) 10–3TH 8xDS1 –1+0 At Antenna Port	4	113	112	112	108	105	102	101	100	98
	16	106	104	104	101	97	94	92	90	91
Typical Characteristic										
MAX INPUT POWER 10–3 BER (Received dBm) at antenna Port	4	–15	–15	–15	–15	–15	–15	–15	–15	–15
	16	–20	–20	–20	–20	–20	–20	–20	–20	–20
BACKGROUND BER at PRx nom. Level=–35dBm Referred to Antenna Port		E–12	E–12	E–12	E–12	E–12	E–12	E–12	E–12	E–12

Transmitted Value Tolerance:

- ± 0,5 dB Ambient Temperature
- ± 2 dB Temperature Range —> – 33°C ÷ + 55°C /ODU

Tab. 11. FCC System Characteristics 16DS1 DS3 8DS1 BER 10^{-6}

	GHz	11	13	15	18	23	24/25	28/29	31/32	38
	QAM	4 16	4 16	4 16	4 16	4 16	4 16	4 16	4 16	4 16
Guaranteed Characteristic										
TRANSMITTER OUTPUT POWER (dBm) (STANDARD With ATPC) dBm At Antenna Port	4	24	24	24	22	19	17	16	16	16
	16	21	20	20	19	16	14	13	13	13
10–6 BER THR 16xDS1 (Received power) dBm At Antenna Port	4	–84	–83	–83	–81	–81	–80	–80	–79	–77
	16	–80	–79	–79	–77	–77	–76	–76	–75	–73
10–6 BER THR DS3 (Received power)dBm At Antenna Port	4	–81	–80	–80	–78	–78	–77	–77	–76	–74
	16	–77	–76	–76	–74	–74	–73	–73	–72	–70
10–6 BER THR 8xDS1 (Received power) dBm At Antenna Port	4	–87	–86	–86	–84	–84	–83	–83	–82	–80
	16	–83	–82	–82	–80	–80	–79	–79	–78	–76
Net System Gain dB (with branching losses and with ATPC) 10–6TH 16xDS1 –1+0 At Antenna Port	4	108	107	107	103	100	97	96	95	93
	16	101	99	99	96	93	90	89	88	86
Net System Gain dB (with branching losses and with ATPC) 10–6TH DS3 –1+0 At Antenna Port	4	105	104	104	100	97	94	93	92	90
	16	98	96	96	93	90	87	86	85	83
Net System Gain dB (with branching losses and with ATPC) 10–6TH 8xDS1 –1+0 At Antenna Port	4	111	110	110	106	103	100	99	98	96
	16	104	102	102	99	96	93	92	91	89
Typical Characteristic										
MAX INPUT POWER 10–6 BER (Received dBm) at antenna Port	4	–15	–15	–15	–15	–15	–15	–15	–15	–15
	16	–20	–20	–20	–20	–20	–20	–20	–20	–20
BACKGROUND BER at PRx nom. Level=–35dBm Referred to Antenna Port		E–12	E–12	E–12	E–12	E–12	E–12	E–12	E–12	E–12

Transmitted Value Tolerance:

– ± 0,5 dB Ambient Temperature

– ± 2 dB Temperature Range —> – 33°C ÷ + 55°C /ODU

All rights reserved. Passing on and copying of this document, use and communication of its contents not permitted without written authorization from Alcatel.

All rights reserved. Passing on and copying of this document, use and communication of its contents not permitted without written authorization from Alcatel.

Tab. 12. FCC System Characteristics 4DS1 2DS1 BER 10^{-3}

	GHz	11	13	15	18	23	24/25	28/29	31/32	38
	QAM	4 16	4 16	4 16	4 16	4 16	4 16	4 16	4 16	4 16
Guaranteed Characteristic										
TRANSMITTER OUTPUT POWER (dBm) (STANDARD With ATPC) dBm At Antenna Port	4	24	24	24	22	19	17	16	16	16
	16	21	20	20	19	16	14	13	13	13
10–3 BER THR 4xDS1 (Received power) dBm At Antenna Port	4	–92	–91	–91	–89	–89	–88	–88	–87	–85
	16									
10–3 BER THR 2xDS1 (Received power) dBm At Antenna Port	4	–95	–94	–94	–92	–92	–91	–91	–90	–88
	16									
Net System Gain dB (with branching losses and with ATPC) 10–3TH 4xDS1 –1+0 At Antenna Port	4	116	115	115	111	108	105	104	103	101
	16									
Net System Gain dB (with branching losses and with ATPC) 10–3TH 2xDS1 –1+0 At Antenna Port	4	119	118	118	114	111	108	107	106	104
	16									
Typical Characteristic										
MAX INPUT POWER 10–3 BER (Received dBm) at antenna Port	4	–15	–15	–15	–15	–15	–15	–15	–15	–15
	16	–20	–20	–20	–20	–20	–20	–20	–20	–20
BACKGROUND BER at PRx nom. Level=–35dBm Referred to Antenna Port		E–12	E–12	E–12	E–12	E–12	E–12	E–12	E–12	E–12

Transmitted Value Tolerance:

– ± 0,5 dB Ambient Temperature

– ± 2 dB Temperature Range —> – 33°C ÷ + 55°C /ODU

Tab. 13. FCC System Characteristics 4DS1 2DS1 BER 10^{-6}

	GHz	11	13	15	18	23	24/25	28/29	31/32	38
	QAM	4 16	4 16	4 16	4 16	4 16	4 16	4 16	4 16	4 16
Guaranteed Characteristic										
TRANSMITTER OUTPUT POWER (dBm) (STANDARD With ATPC) dBm At Antenna Port	4	24	24	24	22	19	17	16	16	16
	16	21	20	20	19	16	14	13	13	13
10–6 BER THR 4xDS1 (Received power)dBm At Antenna Port	4	–90	–89	–89	–87	–87	–86	–86	–85	–83
	16									
10–6 BER THR 2xDS1 (Received power) dBm At Antenna Port	4	–93	–92	–92	–90	–90	–89	–89	–88	–86
	16									
Net System Gain dB (with branching losses and with ATPC) 10–6TH 4xDS1 –1+0 At Antenna Port	4	114	113	113	109	106	103	102	101	99
	16									
Net System Gain dB (with branching losses and with ATPC) 10–6TH 2xDS1 –1+0 At Antenna Port	4	117	116	116	112	109	106	105	104	102
	16									
Typical Characteristic										
MAX INPUT POWER 10–6 BER (Received dBm) at antenna Port	4	–15	–15	–15	–15	–15	–15	–15	–15	–15
	16	–20	–20	–20	–20	–20	–20	–20	–20	–20
BACKGROUND BER at PRx nom. Level=–35dBm Referred to Antenna Port		E–12	E–12	E–12	E–12	E–12	E–12	E–12	E–12	E–12

Transmitted Value Tolerance:

– ± 0,5 dB Ambient Temperature

– ± 2 dB Temperature Range —> – 33°C ÷ + 55°C /ODU

All rights reserved. Passing on and copying of this document, use and communication of its contents not permitted without written authorization from Alcatel.

All rights reserved. Passing on and copying of this document, use and communication of its contents not permitted without written authorization from Alcatel.

1–2.1.7 Antenna gain (typical/guaranteed gain at mid–band)

	INTEGRATED (typical value)		NON–INTEGRATED (guaranteed value)
	30 cm (dB)	60 cm (dB)	Flextwist loss (dB)
11 GHz		34	0.35
13 GHz		35.3	0.65
15 GHz	31.1	36.5	
18 GHz	33.3	38.6	
23 GHz	34.9	40.1	
25 GHz	36	41.1	
28 GHz	36	41.1	2
32 GHz	36	41.1	
38 GHz	39.6	44.5	

1–2.1.8 Switching system

The system can support 3 levels of protection against hardware problems.

All the switches are independent and have its own switching criteria.

Available switches		
Tx EPS	**Rx EPS**	**ODU switch (HSB)**
Select the IDU unit in Tx	Select the IDU unit in Rx	Select the ODU on line
Not hitless	Not hitless	Not hitless
Non revertive/Revertive	Non revertive/Revertive	Non revertive/Revertive

Switch vs. Configuration			
Configuration	**Tx EPS**	**Rx EPS**	**ODU switch**
1+1 FD	YES	YES	NO
1+1HSB	YES	YES	YES

1–2.2 Tributary interfaces

Type	2/1.5 Mbit/s ITU–T G.703 120 Ohm balanced or 75 Ohm unbalanced 34/45 Mbit/s ITU–T G.703 75 Ohm
Jitter	ITU–T G. 823/ G. 921

1–2.3 Modem

Modulation	4/16 QAM
Demodulation	Coherent
Equalizer type	19–tap FSE
Channel coding	Reed Solomon (255,239)
Spectrum shaping	Raised cosine
Link Identity code	16 codes

1–2.4 Maximum capacity and Modulation type

A FLASH CARD is plugged into the IDU Main unit giving the maximum capacity for the tributaries and the Modulation Type. For details please refer to point **[3]** on page 28.

1–2.5 IDU–ODU cable

Coax. cable type (single)	Filotex ET 390998 or equivalent
Coax. connector	N (50 ohm)
Max. length	300 m
Lightening protection	ITU–T K17 (current 333 A)
Signals on the cable	DC Voltage/HDB3 Tx/HDB3 Rx (Note 1)
Gross bit rate on the cable: – ETSI (2 to 16xE1/E3) – ANSI (4 to 16xDS1/DS3)	 39.168 Mbit/s 57.120 Mbit/s

Note 1: The HDB3 signal contains the main signal, auxiliary signal and IDU–ODU service channel.

All rights reserved. Passing on and copying of this document, use and communication of its contents not permitted without written authorization from Alcatel.

All rights reserved. Passing on and copying of this document, use and communication of its contents not permitted without written authorization from Alcatel.

1–2.6 Man–machine interface

Visual	7 LEDs
Other	F interface for Personal Computer (Windows™) RS232C TMN interface Ethernet 10/100 Base–T TMN Data channel 64kbit/s interface RS422/G703 Interface for Telephone Service Channel

1–2.7 Alarms

Equipment alarms	3 outputs (IDU HW Failure alarm, ODU Main Failure alarm, ODU Spare Failure alarm)
Housekeeping alarms	7 inputs / 4 outputs

1–2.8 Power supply

DC nominal voltage (primary)	± 40 to ± 60 Vdc
Polarity	+ or – floating (isolated ground)
Max Power Consumption	1+0 : ≤ 45W 1+1 : ≤ 90W

1–2.9 Mechanical characteristics

1+0 IDU	49x449x210 mm(1.9x17.7x8.3 in) / 3 kg(6.6 lb) (19” / 1.5U) (see also para.2–2.1 on page 64)
1+1 IDU	88x449x210 mm(3.5x17.7x8.3 in) / 4 kg(8.8 lb) (19” / 2U) (see also para.2–2.3 on page 68)
ODU	235x235x72 mm(9.25x9.25x2.8 in) / 3.9 kg(8.8 lb) (see also para.2–3.2 on page 71)
Antenna	Integrated with 30 or 60 cm (12 or 24 in) diameter Separated with larger diameters
Interconnecting cable	One 50 ohm, coaxial cable, max length: 300 m(984 ft)

1–2.10 Environmental conditions

Storage		ETS 300 019 class 1.3
Transport		ETS 300 019 class 2.3
Operation	**IDU**	ETS 300 019 class 3.2 Temperature range: –5°C to +55°C (23°F to 131°F)
	ODU	ETS 300 019 class 4.1, IP 67 Temperature range: –33°C to +55°C (–27.4°F to 131°F)

1–2.11 Electro–magnetic compatibility/safety

EMC	ETS 300 385 class B grade B/FCC Part 15 subpart B–class A
Safety	EN 60 950
Power supply	ETS 300 132
Electro–Static discharge	EN 55022 class B
Lightning protection	Symmetric protection implemented in ODU & IDU ± 5kV on cable ground according to IEC 1000–4–5 with 2 wave types: 1.2/50 µs and 10/700 µs

All rights reserved. Passing on and copying of this document, use and communication of its contents not permitted without written authorization from Alcatel.

SECTION 2: SYSTEM COMPOSITION AND CONFIGURATIONS

This section gives detailed operative information on:

- equipment items (P/Ns, equipping rules, labels for remote inventory)
- physical and logical position in the system
- unit assembly/subassembly and front panel drawings, with the description on the access point usage (connectors, visual indicators, buttons)
- pinout description of connectors for Customer implementation
- summary and operative information on characteristics of external interfaces

SECTION CONTENT	PAGE
Chapter 2–1 – IDU part lists It gives reference information regarding the IDU equipment's items, that are referenced to by the other parts of the handbook.	59
Chapter 2–2 – IDU provisioning It describes the IDU provisioning according to the system configurations.	63
Chapter 2–3 – ODU and antenna configurations, part lists and provisioning It describes the ODU configurations and relevant provisioning.	71
Chapter 2–4 – IDU operative information It gives detailed operative information regarding the IDU shelf's units available with the equipment version this handbook issue is relevant to, for installation, commissioning and maintenance purposes. Information given is relevant to assembly/subassembly and front panel drawings, as well as the usage description of the access points (connectors, visual indicators, buttons).	87
Chapter 2–5 – Distributor subracks It presents the available and optionally equippeable subracks for system wiring.	113
Chapter 2–6 – ODU and related optional tools operative information It gives operative information, for installation, commissioning and maintenance purposes regarding the ODU equipment, the Portable Service Kit, and the Rx power monitoring cable.	115
Chapter 2–7 – Station layouts It describes the most common of all the available system configurations and layouts envisaged for the equipment.	121

All rights reserved. Passing on and copying of this document, use and communication of its contents not permitted without written authorization from Alcatel.

All rights reserved. Passing on and copying of this document, use and communication of its contents not permitted without written authorization from Alcatel.

All rights reserved. Passing on and copying of this document, use and communication of its contents not permitted without written authorization from Alcatel.

2–1 IDU PART LIST

This chapter gives reference information regarding the IDU equipment's items, that are referenced to by the other parts of the handbook.

For each item this information is given in following Tab. 14. :

Ref.[x] is used in other parts of this handbook to refer to the item

P/N part number

N.B. The last two ANV-P/N letters stand for a "feasible alternative", they might differentiate two items even though still functionally compatible. For this reason the indicated ANV P/N does not include the last two letters.

NAME item commercial name

Remote inventory label

Max Q.ty note: the effective types and quantities of the listed items are given in chapter 2–2 on page 63 – **IDU provisioning**, according to the envisaged system configurations

Spare part item item that should be additionally included in the set of IDU spare parts (see para.3–3.3.1.2 on page 144 for details)

N.B. explanatory note in Tab. 15. on page 62

Tab. 14. IDU part lists

Ref.	ANV P/N (Factory P/N)	Name	Remote inventory label	Max Q.ty	Spare part item	N.B.
SUBRACKS						
[1]	3DB 04254 AA— (593.230.039)	IDU 1+0 SUBRACK	IDU10	1	Y	
[2]	3DB 04406 AA— (593.230.040)	IDU 1+0 EXT/1+1 SUBRACK	IDU11		Y	
[3]	3DB 05583 AA— (593.230.042)	DISTRIBUTOR SUBRACK FOR 1.0/2.3		1		[i]
[4]	3DB 05584 AA— (593.230.043)	DISTRIBUTOR SUBRACK FOR 1.6/5.6				
[5]	3DB 05585 AA— (593.230.044)	DISTRIBUTOR SUBRACK FOR 120 OHM				
[6]	3DB 05586 AA— (593.230.045)	DISTRIBUTOR SUBRACK FOR BNC				
UNITS						
[7]	3DB 04530 AA— (474.210.454)	IDU ACCESS UNIT	ACCESS	1	Y	
[8]	3DB 04524 AA— (411.200.590)	IDU MAIN UNIT (48/60 power supply range)	M4860	1	Y	
[9]	3DB 08425 AA— (411.200.593)	IDU EXTENSION UNIT (48/60 power supply range)	E4860	1	Y	
[10]	3DB 04542 AA— (474.210.455)	IDU FANS UNIT	FAN	1	Y	
COVER						
[11]	3DB 04829 AA— (290.202.257)	FRONT COVER PLANE EXTENSION		1		[ii]
[12]	3DB 04943 AA— (290.202.262)	FRONT COVER FANS PIT		1		
FLASH CARD						
[13]	3DB 05625 AA— (451.200.265)	FULL FLEXIBLE FLASH CARD		1	Y	[iii], [iv]
[14]	3DB 05625 AB— (451.200.266)	16xE1/DS1 16 QAM FLASH CARD			Y	[iii]
[15]	3DB 05625 AC— (451.200.267)	4xE1 16 QAM FLASH CARD			Y	[iii]
[16]	3DB 05625 AD— (451.200.268)	16xE1/DS1 4 QAM FLASH CARD			Y	[iii]
[17]	3DB 05625 AE— (451.200.269)	4xE1/DS1 4 QAM FLASH CARD			Y	[iii]

All rights reserved. Passing on and copying of this document, use and communication of its contents not permitted without written authorization from Alcatel.

All rights reserved. Passing on and copying of this document, use and communication of its contents not permitted without written authorization from Alcatel.

Ref.	ANV P/N (Factory P/N)	Name	Remote inventory label	Max Q.ty	Spare part item	N.B.
EQUIPMENT ACCESSORIES						
[18]	3CY 07335 AA— (299.702.019)	TELEPHONE KIT (DTMF)		1		[v]
[19]	3DB 01398 AA— (299.702.815)	MAINTENANCE TOOL KIT		1		[vi]
	3DB 01399 AA— (299.702.816)	STATION TOOL KIT		1		[vii]
	3DB 01397 AA— (299.702.809)	INSTALLATION TOOL KIT		1		
RACKS AND TRU						
	3DB 04656 AA— (282.102.003)	ETSI RACK H 2200		1		[vii]
	3DB 04657 AA— (282.102.004)	ETSI RACK H 2000		1		
	3CY 08476 AA— (593.230.028)	STANDARDIZED SUBRACK T.R.U.		1		
	3CY 08482 AA— (284.602.252)	ASSEMBLY FRONT PLATE 8 C.B.s		1		
	3CY 08483 AA— (284.602.253)	ASSEMBLY FRONT PLATE 16 C.B.s		1		
	3CY 08477 AA— (299.702.680)	8 CIRCUIT BREAKER GROUP		1		
	3CY 08478 AA— (299.702.681)	8 FUSE HOLDER GROUP		1		
	3CY 08479 AA— (299.702.682)	16 CIRCUIT BREAKER GROUP		1		
	3CY 08480 AA— (299.702.683)	16 FUSE HOLDER GROUP		1		
	1AB 08484 0004 (031.040.142)	FUSE 4 A–500 V TIME LAG		1		
	1AB 08484 0005 (031.040.145)	FUSE 6 A–500 V TIME LAG		1		
	3DB 04846 AA— (299.302.113)	RACK MOUNTING KIT 1+0C		1		
	3DB 04847 AA— (299.302.114)	RACK MOUNTING KIT 1+0EXT/1+1		1		
	3DB 04848 AA— (299.302.115)	TABLE/WALL MOUNTING KIT		1		
	3DB 05852 AA— (299.302.152)	TABLE MOUNTING KIT		1		

Ref.	ANV P/N (Factory P/N)	Name	Remote inventory label	Max Q.ty	Spare part item	N.B.
SOFTWARE AND SOFTWARE LICENCES: refer to the Operator's Handbook						
INSTALLATION MATERIALS: refer to Installation Handbook						
DOCUMENTATION: see para. B.2.1 on page 243						

Tab. 15. Notes to Tab. 14.

N.B.	Explanation
[i]	See para.2–5 on page 113
[ii]	See para.2–2.2 on page 66
[iii]	Flash card housed in the IDU Main unit – REF.[8] (Q.ty 1)
[iv]	With this Flash card all the configurations can be implemented: NxE1/DS1 or E3/DS3, 4 QAM or 16 QAM.
[v]	See para.3–2.1 on page 134
[vi]	See para.3–3.2.2 on page 141
[vii]	Refer to Installation Handbook

All rights reserved. Passing on and copying of this document, use and communication of its contents not permitted without written authorization from Alcatel.

All rights reserved. Passing on and copying of this document, use and communication of its contents not permitted without written authorization from Alcatel.

2–2 IDU PROVISIONING

This chapter describes the IDU provisioning according to the system configurations.

Two versions of IDU are available and can be adapted to a wide configuration range:

– Compact IDU (1U+5 mm high) supporting 1+0 unprotected configuration, see para.2–2.1 page 64

– Protected IDU (2U high) able to support all the possible configurations:

- 1+0 Extendible to 1+1, see para.2–2.2 page 66
- 1+1 HSB, Space diversity, Frequency diversity, see para.2–2.3 page 68

NOTE ON ANV P/N The last two ANV-P/N letters stand for a ”feasible alternative”, they might differentiate two items even though still functionally compatible. For this reason the indicated ANV P/N does not include the last two letters.

2–2.1 1+0 Compact IDU composition and equipment provisioning

The 1+0 Compact IDU is accommodated in one subrack with the following dimensions:

- width 449 mm (17.7 in)
- height 49 mm (1.9 in) (1U+5mm)
- depth 210 mm (8.3 in)

The mechanical structure adopted comply with ETSI/19” standard practice.

This IDU can be also inserted in a standard ETSI rack, or placed on a desk, or mounted on a wall.

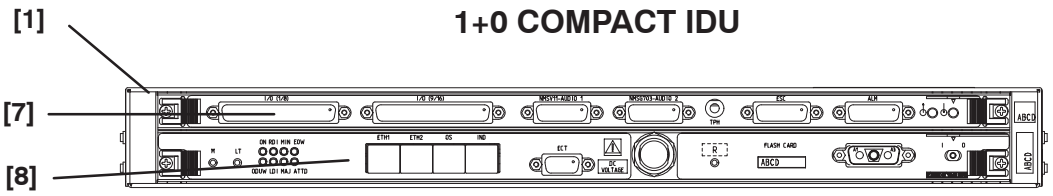

Fig. 15. 1+0 Compact IDU: composition

All rights reserved. Passing on and copying of this document, use and communication of its contents not permitted without written authorization from Alcatel.

All rights reserved. Passing on and copying of this document, use and communication of its contents not permitted without written authorization from Alcatel.

Tab. 16. 1+0 Compact IDU: equipment provisioning

TOP CODES		COMPOSITION (Note 1)							
ANV P/N (Factory P/N)	**Description**	**[1]**	**[7]**	**[8]**	**[13]**	**[14]**	**[15]**	**[16]**	**[17]**
3DB 05619 AA— (543.260.011)	IDU 1+0C FULL FLEXIBLE	X	X	X	X	–	–	–	–
3DB 05619 AB— (543.260.012)	IDU 1+0C 16xE1/DS1 16 QAM	X	X	X	–	X	–	–	–
3DB 05619 AC— (543.260.013)	IDU 1+0C 4xE1 16 QAM	X	X	X	–	–	X	–	–
3DB 05619 AD— (543.260.014)	IDU 1+0C 16xE1/DS1 4 QAM	X	X	X	–	–	–	X	–
3DB 05619 AE— (543.260.015)	IDU 1+0C 4xE1/DS1 4 QAM	X	X	X	–	–	–	–	X

Note 1: For the P/Ns of the items ([1], [2], …. ect.) refer to column **Ref.** in Tab. 14. on page 60.

LEGEND:

X = Q.ty 1

[1] = IDU 1+0 SUBRACK

[7] = IDU ACCESS UNIT

[8] = IDU MAIN UNIT (Floating 48/60 V power supply range)

[13] = FULL FLEXIBLE FLASH CARD (Note 2, 3)

[14] = 16xE1/DS1 16 QAM FLASH CARD (Note 2)

[15] = 4xE1 16 QAM FLASH CARD (Note 2)

[16] = 16xE1/DS1 4 QAM FLASH CARD (Note 2)

[17] = 4xE1/DS1 4 QAM FLASH CARD (Note 2)

Note 2: The Flash card is housed in the IDU Main unit (Q.ty. 1).

Note 3: With this Flash card all the configurations can be implemented: NxE1/DS1 or E3/DS3, 4 QAM or 16 QAM.

2–2.2 1+0 Extendable IDU composition and equipment provisioning

The 1+0 Extendable IDU is accommodated in one subrack with the following dimensions:

- width 449 mm (17.7 in)
- height 88.1 mm (3.5 in) (2U)
- depth 210 mm (8.3 in)

The mechanical structure adopted complies with ETSI/19” standard practice.

This IDU can be also inserted in a standard ETSI rack, or placed on a desk, or mounted on a wall.

1+0 Extendable IDU

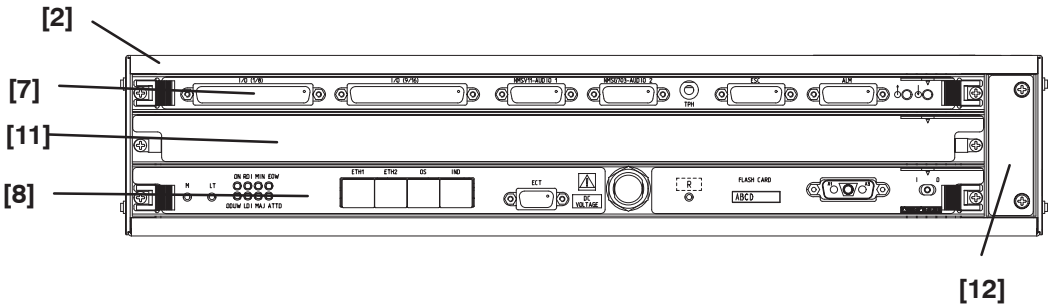

Fig. 16. 1+0 Extendable IDU: composition

All rights reserved. Passing on and copying of this document, use and communication of its contents not permitted without written authorization from Alcatel.

All rights reserved. Passing on and copying of this document, use and communication of its contents not permitted without written authorization from Alcatel.

Tab. 17. 1+0 Extendable IDU: equipment provisioning

TOP CODES		COMPOSITION (Note 1)									
ANV P/N (Factory P/N)	**Description**	**[2]**	**[7]**	**[8]**	**[13]**	**[14]**	**[15]**	**[16]**	**[17]**	**[11]**	**[12]**
3DB 05620 AA— (543.260.016)	IDU 1+0C EXT FULL FLEXIBLE	X	X	X	X	–	–	–	–	X	X
3DB 05620 AB— (543.260.017)	IDU 1+0C EXT 16xE1/DS1 16 QAM	X	X	X	–	X	–	–	–	X	X
3DB 05620 AC— (543.260.018)	IDU 1+0C EXT 4xE1 16 QAM	X	X	X	–	–	X	–	–	X	X
3DB 05620 AD— (543.260.019)	IDU 1+0C EXT 16xE1/DS1 4 QAM	X	X	X	–	–	–	X	–	X	X
3DB 05620 AE— (543.260.020)	IDU 1+0C EXT 4xE1/DS1 4 QAM	X	X	X	–	–	–	–	X	X	X

Note 1: For the P/Ns of the items ([1], [2], …. ect.) refer to column **Ref.** in Tab. 14. on page 60.

LEGEND:

X = Q.ty 1

[2] = IDU 1+0 EXT/1+1 SUBRACK

[7] = IDU ACCESS UNIT

[8] = IDU MAIN UNIT (Floating 48/60 V power supply range)

[13] = FULL FLEXIBLE FLASH CARD (Note 2, 3)

[14] = 16xE1/DS1 16 QAM FLASH CARD (Note 2)

[15] = 4xE1 16 QAM FLASH CARD (Note 2)

[16] = 16xE1/DS1 4 QAM FLASH CARD (Note 2)

[17] = 4xE1/DS1 4 QAM FLASH CARD (Note 2)

[11] = Front cover for the Extension unit

[12] = Front cover for the Fans unit

Note 2: The Flash card is housed in the IDU Main unit (Q.ty. 1).

Note 3: With this Flash card all the configurations can be implemented: NxE1/DS1 or E3/DS3, 4 QAM or 16 QAM.

2–2.3 1+1 IDU composition and equipment provisioning

The 1+1 IDU is accommodated in one subrack with the following dimensions:

- width 449 mm (17.7 in)
- height 88.1 mm (3.5 in) (2U)
- depth 210 mm (8.3 in)

The mechanical structure adopted complies with ETSI/19” standard practice.

This IDU can be also inserted in a standard ETSI rack, or placed on a desk, or mounted on a wall.

1+1 IDU

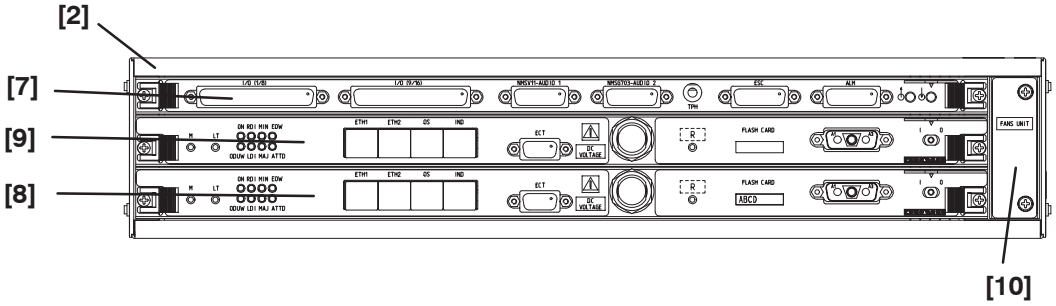

Fig. 17. 1+1 IDU: composition

All rights reserved. Passing on and copying of this document, use and communication of its contents not permitted without written authorization from Alcatel.

All rights reserved. Passing on and copying of this document, use and communication of its contents not permitted without written authorization from Alcatel.

Tab. 18. 1+1 IDU: equipment provisioning

TOP CODES		COMPOSITION (Note 1)									
ANV P/N (Factory P/N)	**Description**	**[2]**	**[7]**	**[8]**	**[9]**	**[13]**	**[14]**	**[15]**	**[16]**	**[17]**	**[10]**
3DB 05621 AA— (543.260.021)	IDU 1+1 FULL FLEXIBLE	X	X	X	X	X	–	–	–	–	X
3DB 05621 AB— (543.260.022)	IDU 1+1 16xE1/DS1 16 QAM	X	X	X	X	–	X	–	–	–	X
3DB 05621 AC— (543.260.023)	IDU 1+1 4xE1 16 QAM	X	X	X	X	–	–	X	–	–	X
3DB 05621 AD— (543.260.024)	IDU 1+1 16xE1/DS1 4 QAM	X	X	X	X	–	–	–	X	–	X
3DB 05621 AE— (543.260.025)	IDU 1+1 4xE1/DS1 4 QAM	X	X	X	X	–	–	–	–	X	X

Note 1: For the P/Ns of the items ([1], [2], …. ect.) refer to column **Ref.** in Tab. 14. on page 60.

LEGEND:

X = Q.ty 1

[2] = IDU 1+0 EXT/1+1 SUBRACK

[7] = IDU ACCESS UNIT

[8] = IDU MAIN UNIT (Floating 48/60 V power supply range)

[9] = IDU EXTENSION UNIT (Floating 48/60 V power supply range)

[13] = FULL FLEXIBLE FLASH CARD (Note 2, 3)

[14] = 16xE1/DS1 16 QAM FLASH CARD (Note 2)

[15] = 4xE1 16 QAM FLASH CARD (Note 2)

[16] = 16xE1/DS1 4 QAM FLASH CARD (Note 2)

[17] = 4xE1/DS1 4 QAM FLASH CARD (Note 2)

[10] = IDU FANS UNIT

Note 2: The Flash card is housed in the IDU Main unit (Q.ty. 1).

Note 3: With this Flash card all the configurations can be implemented: NxE1/DS1 or E3/DS3, 4 QAM or 16 QAM.

All rights reserved. Passing on and copying of this document, use and communication of its contents not permitted without written authorization from Alcatel.

All rights reserved. Passing on and copying of this document, use and communication of its contents not permitted without written authorization from Alcatel.

2–3 ODU AND ANTENNA CONFIGURATIONS, PART LISTS AND PROVISIONING

This chapter describes the ODU configurations and relevant provisioning:

- **ODU general description** herebelow
- **ODU mechanical design** herebelow
- **ODU configurations** on page 72
- **ODU part lists** on page 73
- **Antenna configurations** on page 78
- **Integrated antenna part list** on page 83
- **Coupler part list** on page 84
- **Part list of ODU accessories and installation materials** on page 85

2–3.1 ODU general description

Refer to point **a)** on page 29.

2–3.2 ODU mechanical design

The ODU mechanical design is the same from 11 GHz up to 38 GHz.

Frequency	11…38 GHz
Dimensions	235 x 235 x 72 mm (9.25x9.25x2.8in)
Weight	3.9 kg (8.58 lb)

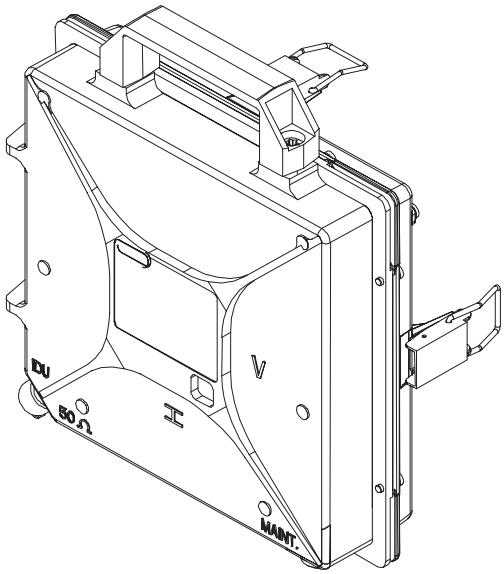

Fig. 18. ODU view, dimensions and weight

The ODUs are delivered with the “nose” adapter in case of configurations with the separated antenna.

2–3.3 ODU configurations

The available outdoor configurations are listed in Tab. 19. herebelow:

Tab. 19. ODU configurations

Outdoor configuration	UNITS	APPLICATIONS	ADVANTAGES
1+0	1x ODU 1x antenna single polarization	Non–protected	
1+1 HSB	2x ODUs at same frequency 1x coupler 1x antenna single polarization	Protection against failures	
1+1 HSB SD	2x ODUs at same frequency 2x antennas single polarization	Protection against failures	Improvement of performances versus multipath propagation
1+1 FD	2x ODUs at different frequencies 2x antennas single polarization (or 1 antenna dual polarization)	Protection against failures	Improvement of performances versus multipath propagation

N.B. For explanatory diagrams, refer to para.1–1.6 on page 31 **System configurations**.

Legend:

FD: Frequency diversity

HSB: Hot Stand By

SD: Space Diversity

The P/Ns of the available ODUs in the different RF bands are listed in para. 2–3.4 on page 73.

The P/Ns of the available couplers in the different RF bands are listed in para. 2–3.7 on page 84.

All rights reserved. Passing on and copying of this document, use and communication of its contents not permitted without written authorization from Alcatel.

All rights reserved. Passing on and copying of this document, use and communication of its contents not permitted without written authorization from Alcatel.

2–3.4 ODU part lists

The following tables report the P/N of the available ODUs with the following information from left to right:

Column 1: Shifter (MHz)
Column 2 & 3: Tx and Rx sub–bands
Column 4 to 7: Tx & Rx frequency ranges at RF interface (MHz)

NOTE ON ANV P/N The last two ANV-P/N letters stand for a ”feasible alternative”, they might differentiate two items even though still functionally compatible. For this reason the indicated ANV P/N does not include the last two letters.

Note: The ODU P/Ns listed in the following tables include the solar shield.

Tab. 20. 11 GHz ODU
t.b.d.

Tab. 21. 13 GHz ODU

				RF interface (MHz)			
	1	2	3	4	5	6	7
ODU P/N	**Shifter**	**Tx**	**Rx**	**RF Tx min**	**RF Tx max**	**RF Rx min**	**RF Rx max**
3CC 13690 AA—	266	1p	1	13016	13131	12750	12865
3CC 13691 AA—		2p	2	13131	13246	12865	12980
3CC 13688 AA—		1	1p	12750	12865	13016	13131
3CC 13689 AA—		2	2p	12865	12980	13131	13246

Tab. 22. 15 GHz ODU

ODU P/N	Shifter	
3CC 13692 AA—	315	1–1' (preliminary information)
3CC 13693 AA—		2–2' (preliminary information)
3CC 13694 AA—		1'–1 (preliminary information)
3CC 13695 AA—		2'–2 (preliminary information)

				RF interface (MHz)			
	1	2	3	4	5	6	7
ODU P/N	**Shifter**	**Tx**	**Rx**	**RF Tx min**	**RF Tx max**	**RF Rx min**	**RF Rx max**
3CC 13698 AA—	420	1p	1	14920	15140	14500	14720
3CC 13699 AA—		2p	2	15130	15350	14710	14930
3CC 13696 AA—		1	1p	14500	14720	14920	15140
3CC 13697 AA—		2	2p	14710	14930	15130	15350
3CC 13702 AA—	475	1p	1	14975	15135	14500	14660
3CC 13703 AA—		2p	2	15135	15350	14660	14875
3CC 13700 AA—		1	1p	14500	14660	14975	15135
3CC 13701 AA—		2	2p	14660	14875	15135	15350
3CC 14079 AA—	475 Low Power	1p	1	14975	15135	14500	14660
3CC 14080 AA—		2p	2	15135	15350	14660	14875
3CC 14077 AA—		1	1p	14500	14660	14975	15135
3CC 14078 AA—		2	2p	14660	14875	15135	15350
3CC 13706 AA—	490	1p	1	14890	15125	14400	14635
3CC 13707 AA—		2p	2	15115	15350	14625	14860
3CC 13704 AA—		1	1p	14400	14635	14890	15125
3CC 13705 AA—		2	2p	14625	14860	15115	15350
3CC 13710 AA—	640	1p	1	15140	15352	14500	14712
3CC 13708 AA—		1	1p	14500	14712	15140	15352
3CC 13713 AA—	728	1p	1	15228	15348	14500	14620
3CC 13712 AA—		1	1p	14500	14620	15228	15348

All rights reserved. Passing on and copying of this document, use and communication of its contents not permitted without written authorization from Alcatel.

All rights reserved. Passing on and copying of this document, use and communication of its contents not permitted without written authorization from Alcatel.

Tab. 23. 18 GHz ODU

				RF interface (MHz)			
	1	2	3	4	5	6	7
ODU P/N	**Shifter**	**Tx**	**Rx**	**RF Tx min**	**RF Tx max**	**RF Rx min**	**RF Rx max**
3CC 12993 AA—	1010	1p	1	18710	19205	17700	18195
3CC 12994 AA—		2p	2	19205	19700	18195	18690
3CC 12991 AA—		1	1p	17700	18195	18710	19205
3CC 12992 AA—		2	2p	18195	18690	19205	19700
3CC 13001 AA—	340	1p	1	18920	19040	18580	18700
3CC 13002 AA—		2p	2	19040	19160	18700	18820
3CC 13099 AA—		1	1p	18580	18700	18920	19040
3CC 13000 AA—		2	2p	18700	18820	19040	19160
3CC 12996 AA—	1560 ETSI	1p	1	19260	19700	17700	18140
3CC 12995 AA—		1	1p	17700	18140	19260	19700
3CC 13948 AA—	1560 ANSI	1p	1	19260	19700	17700	18140
3CC 13947 AA—		1	1p	17700	18140	19260	19700

Tab. 24. 23 GHz ODU

				RF interface (MHz)			
	1	2	3	4	5	6	7
ODU P/N	**Shifter**	**Tx**	**Rx**	**RF Tx min**	**RF Tx max**	**RF Rx min**	**RF Rx max**
3CC 13720 AA—	1008	1p	1	23008	23308	22000	22300
3CC 13721 AA—		2p	2	23308	23608	22300	22600
3CC 13718 AA—		1	1p	22000	22300	23008	23308
3CC 13719 AA—		2	2p	22300	22600	23308	23608
3CC 13724 AA—	1200	1p	1	22400	22980	21200	21780
3CC 13725 AA—		2p	2	23020	23600	21820	22400
3CC 13722 AA—		1	1p	21200	21780	22400	22980
3CC 13723 AA—		2	2p	21820	22400	23020	23600
3CC 13728 AA—	1232	1p	1	22430	23010	21198	21783
3CC 13729 AA—		2p	2	23020	23600	21783	22368
3CC 13726 AA—		1	1p	21198	21783	22430	23010
3CC 13727 AA—		2	2p	21783	22368	23020	23600

Tab. 25. 25 GHz ODU							
				RF interface (MHz)			
	1	2	3	4	5	6	7
ODU P/N	**Shifter**	**Tx**	**Rx**	**RF Tx min**	**RF Tx max**	**RF Rx min**	**RF Rx max**
3CC 13736 AA—	1008	1p	1	25548	26002	24540	24994
3CC 13737 AA—		2p	2	26002	26456	24994	25448
3CC 13734 AA—		1	1p	24540	24994	25548	26002
3CC 13735 AA—		2	2p	24994	25448	26002	26456

Tab. 26. 28 GHz ODU							
				RF interface (MHz)			
	1	2	3	4	5	6	7
ODU P/N	**Shifter**	**Tx**	**Rx**	**RF Tx min**	**RF Tx max**	**RF Rx min**	**RF Rx max**
3CC 13740 AA—	1008	1p	1	28548	29002	27540	27994
3CC 13741 AA—		2p	2	29002	29456	27994	28448
3CC 13738 AA—		1	1p	27540	27994	28548	29002
3CC 13739 AA—		2	2p	27994	28448	29002	29456

Tab. 27. 32 GHz ODU							
				RF interface (MHz)			
	1	2	3	4	5	6	7
ODU P/N	**Shifter**	**Tx**	**Rx**	**RF Tx min**	**RF Tx max**	**RF Rx min**	**RF Rx max**
3CC 13746 AA—	812	1p	1	32612	33006	31800	32194
3CC 13747 AA—		2p	2	33006	33400	32194	32588
3CC 13744 AA—		1	1p	31800	32194	32612	33006
3CC 13745 AA—		2	2p	32194	32588	33006	33400

All rights reserved. Passing on and copying of this document, use and communication of its contents not permitted without written authorization from Alcatel.

All rights reserved. Passing on and copying of this document, use and communication of its contents not permitted without written authorization from Alcatel.

Tab. 28. 38 GHz ODU

				RF interface (MHz)			
	1	2	3	4	5	6	7
ODU P/N	**Shifter**	**Tx**	**Rx**	**RF Tx min**	**RF Tx max**	**RF Rx min**	**RF Rx max**
3CC 12989 AA—	1260	1p	1	38310	38880	37050	37620
3CC 12990 AA—		2p	2	38880	39440	37620	38180
3CC 12987 AA—		1	1p	37050	37620	38310	38880
3CC 12988 AA—		2	2p	37620	38180	38880	39440
3CC 13054 AA—	700 FCC	1p	1	39300	39650	38600	38950
3CC 13055 AA—		2p	2	39650	40000	38950	39300
3CC 13052 AA—		1	1p	38600	38950	39300	39650
3CC 13053 AA—		2	2p	38950	39300	39650	40000
3CC 13054 AA—	700 Canada	1p	1	39400	39600	38700	38900
3CC 13934 AA—		2p	2	39600	39800	38900	39100
3CC 13052 AA—		1	1p	38700	38900	39400	39600
3CC 13933 AA—		2	2p	38900	39100	39600	39800

2–3.5 Antenna configurations

The ODU can be connected to:

– an integrated antenna of 30 cm (1FT) or 60 cm (2FT) diameter

– a separated antenna, if larger diameters are necessary. In this case, the antenna is interconnected by a flextwist directly to the ODU, or the coupler, depending on the protection used.

For the outdoor section different 1+1 configuration can be implemented:

- basic HSB with a 1 dB/10 dB asymmetrical coupler and 1 antenna: this configuration optimizes the infrastructure using only one antenna, a 10 dB coupling has been chosen to minimize the losses on the normal path (1 dB only).
- HSB configuration is also available with a 3 dB symmetrical coupler and 1 antenna
- without coupler and 2 antennas: this configuration adds a natural Space Diversity and improves the link budget avoiding coupler losses on the stand–by path.
- without coupler and 1 dual polarization antenna: this configuration allows a polarization diversity, minimizes the antenna and avoids coupler losses on the stand–by path.

The pole mounting versions are given in the following Tab. 29. for each configuration:

Tab. 29. Pole Mounting versions

Version	see para
1+0 with integrated antenna	2–3.5.1 page 79
1+1 with 1 integrated antenna and coupler	2–3.5.2 page 80
Pole mounting for separated antenna	2–3.5.3 page 81

All rights reserved. Passing on and copying of this document, use and communication of its contents not permitted without written authorization from Alcatel.

All rights reserved. Passing on and copying of this document, use and communication of its contents not permitted without written authorization from Alcatel.

2–3.5.1 1+0 configuration with integrated antenna

The following views show the 1+0 configuration with a 30 cm (1FT) antenna in both vertical and horizontal configurations. The modification of the polarization is obtained by rotating the ODU and the nose of the antenna.

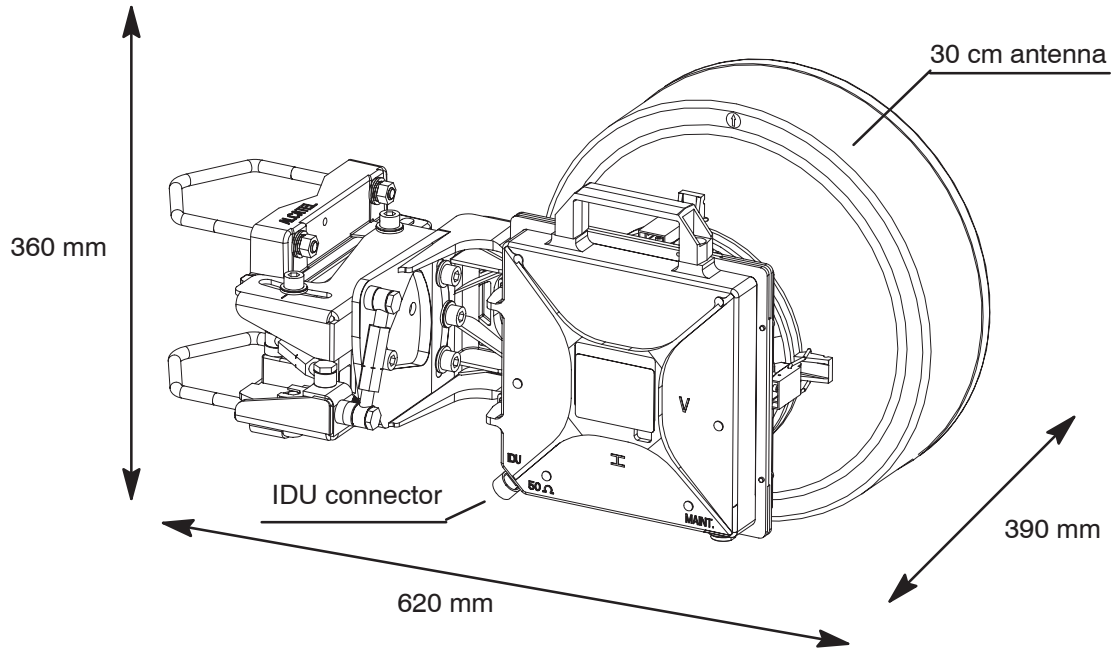

Fig. 19. ODU view integrated antenna (V polarization)

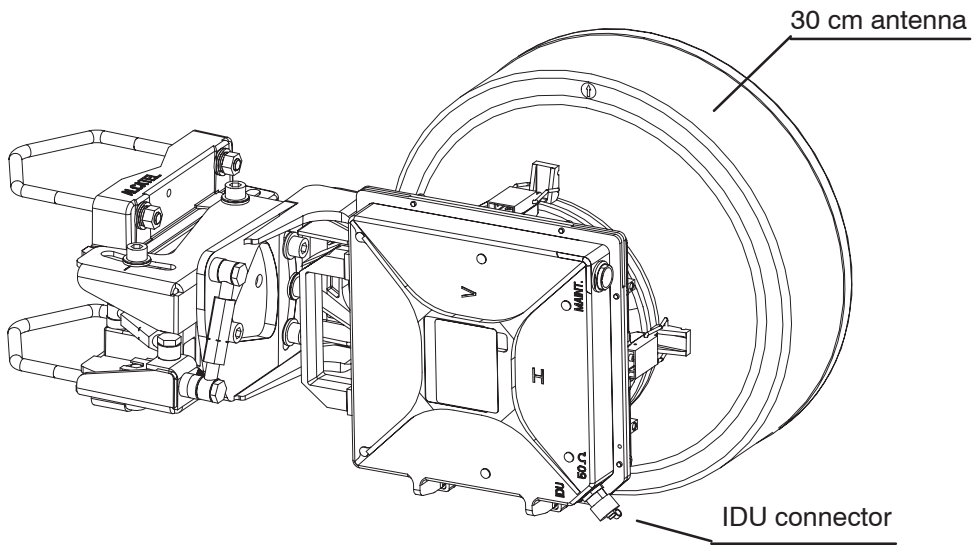

measures as Fig. 19.

Fig. 20. ODU view integrated antenna (H polarization)

2–3.5.2 1+1 HSB configuration

- The 2 ODUs are interconnected through a 3 dB / 3 dB or a 1 dB /10 dB coupler. The coupler is fixed on the 1+0 pole mounting with 4 catches. The 2 ODUs are connected to the coupler with their catches.
- The modification of the polarization is done on the coupler by rotating rings at antenna port and on the antenna by rotating the nose (the ODU are always in the same position).
- Different couplers are available, as shown in Tab. 30. herebelow:

Tab. 30. Available couplers

Frequency band	Coupler type	Waveguide (3 ports)	Coupling loss
11 GHz	3 dB	WR 90	3 dB / 3 dB
	10 dB		1 dB / 10 dB
13, 15 GHz	3 dB	WR 62	3 dB / 3 dB
	10 dB		1 dB / 10 dB
18, 23, 25 GHz	3 dB	WR 42	3 dB / 3 dB
	10 dB		1 dB / 10 dB
28, 32, 38 GHz	3 dB	WR 28	3 dB / 3 dB
	10 dB		1 dB / 10 dB

N.B. For coupler P/Ns, refer to para.2–3.7 on page 84.

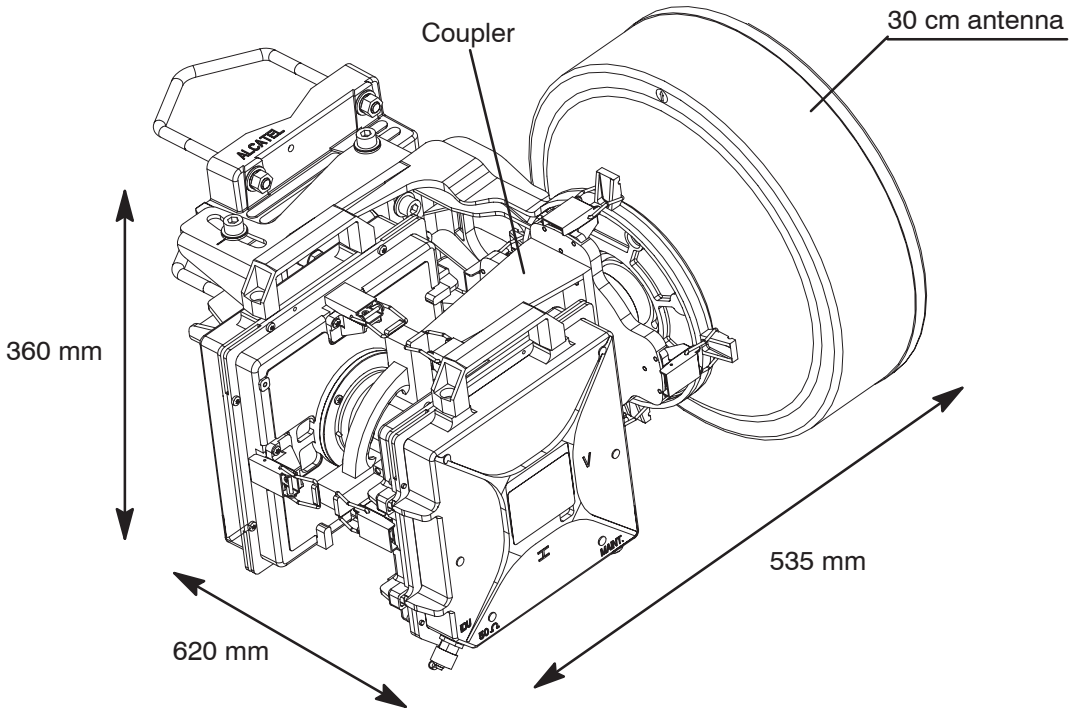

Fig. 21. Coupler

All rights reserved. Passing on and copying of this document, use and communication of its contents not permitted without written authorization from Alcatel.

All rights reserved. Passing on and copying of this document, use and communication of its contents not permitted without written authorization from Alcatel.

2–3.5.3 Configuration with separated antenna

The ODU is fixed on a dedicated pole mounting for separated antenna. A nose adapter (different P/Ns depending on the waveguide dimension) is used to connect the ODU and the flextwist.

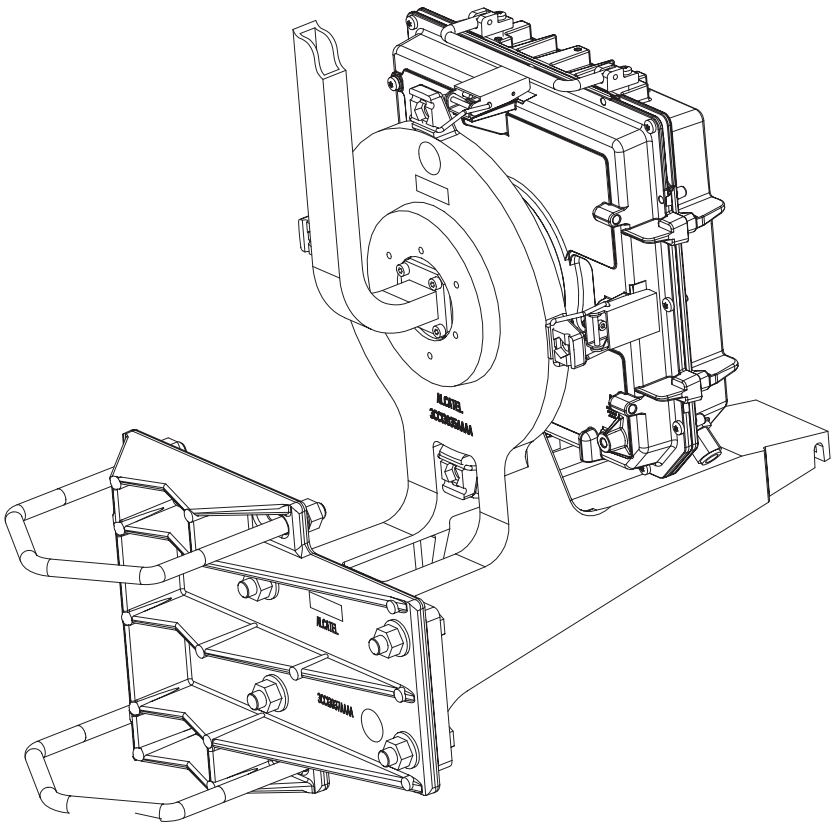

Fig. 22. ODU with separated antenna

Concerning the interface between the ODU output flange and the suggested antenna flange, the following Tab. 31. details for each product the standard wave guide to be used and the suggested flange for the external antenna.

Please note that the use of 600 mm flex twist is not suggested for antennas bigger than 3ft (90 cm diameter), due to mechanical reasons. The suggested way to make the RF connection is to use the elliptical wave guide fitted with flanged connectors.

Tab. 31. ODU Output flanges with external antenna

NOTE ON ANV P/N The last two ANV-P/N letters stand for a "feasible alternative", they might differentiate two items even though still functionally compatible. For this reason the indicated ANV P/N does not include the last two letters.

Equipment and Range (GHz)	ODU Output Flange	FLEXTWIST L=600 mm					Suggested Antenna Flange
	A	C.E.I.	E.I.A.	B	P/N	C	D
9411 AWY 10.7 – 11.7	UBR100	R100	WR90	PBR100	3DB 00686 AA—	UBR100	PBR100
9413 AWY 12.7 – 13.3	UBR140	R140	WR62	PBR140	3DB 00685 AA—	UBR120	PBR120
9415 AWY 14.2 – 15.4	UBR140	R140	WR62	PBR140	3DB 00684 AA—	UBR140	PBR140
9418 AWY 17.7 – 19.7	UBR220	R220	WR42	PBR220	3DB 00683 AA—	UBR220	PBR220
9423 AWY 21.2 – 23.6	UBR220	R220	WR42	PBR220		UBR220	PBR220
9424 AWY 24.2 – 25.3	UBR220	R220	WR42	PBR220		UBR220	PBR220
9425 AWY 24.5 – 26.5	UBR220	R220	WR42	PBR220		UBR220	PBR220
9428 AWY 27.3 – 31.3	UBR320	R320	WR28	PBR320	3DB 00682 AA—	UBR320	PBR320
9431 AWY 31.0 – 31.3	UBR320	R320	WR28	PBR320		UBR320	PBR320
9432 AWY 31.8 – 33.4	UBR320	R320	WR28	PBR320		UBR320	PBR320
9438 AWY 37.0 – 40.0	UBR320	R320	WR28	PBR320		UBR320	PBR320

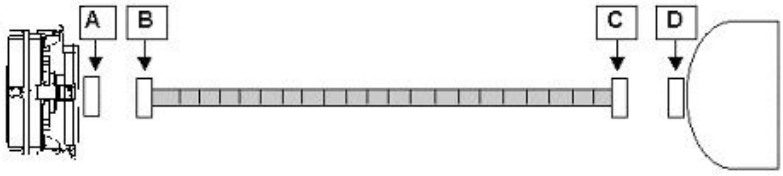

N.B. If the flex–twist is not provided by Alcatel, the user must carefully choose the type of the connection guide in order to limit as much as possible galvanic couples between antenna/flex–twist and flex–twist/ODU contact surfaces that can induce rust. For this purpose please note that the surfaces are:

- chromium–plated at ODU's output flange side
- tin–plated at flex–twist's flange side

All rights reserved. Passing on and copying of this document, use and communication of its contents not permitted without written authorization from Alcatel.

All rights reserved. Passing on and copying of this document, use and communication of its contents not permitted without written authorization from Alcatel.

2–3.6 Integrated antenna part list

Tab. 32. Part list of available integrated antennas

NOTE ON ANV P/N The last two ANV-P/N letters stand for a ”feasible alternative”, they might differentiate two items even though still functionally compatible. For this reason the indicated ANV P/N does not include the last two letters.

Frequency (GHz)	ANV P/N	Commercial Denomination
11	3DB 00673 AA—	11GHZ 2FT SP INTEGRATED ANTENNA
13	3DB 00662 AA—	13GHZ 1FT SP INTEGRATED ANTENNA
	3DB 00663 AA—	13GHZ 2FT SP INTEGRATED ANTENNA
15	3DB 00660 AA—	15GHZ 1FT SP INTEGRATED ANTENNA
	3DB 00661 AA—	15GHZ 2FT SP INTEGRATED ANTENNA
18	3DB 00538 AA—	18GHZ 1FT SP INTEGR. ANTENNA
	3DB 00539 AA—	18GHZ 2FT SP INTEGR. ANTENNA
23	3DB 00540 AA—	23GHZ 1FT SP INTEGR. ANTENNA
	3DB 00541 AA—	23GHZ 2FT SP INTEGR. ANTENNA
25	3DB 00542 AA—	25GHZ 1FT SP INTEGR. ANTENNA
	3DB 00543 AA—	25GHZ 2FT SP INTEGR. ANTENNA
28	3DB 00658 AA—	28GHZ 1FT SP INTEGRATED ANTENNA
	3DB 00659 AA—	28GHZ 2FT SP INTEGRATED ANTENNA
32	3DB 03802 AA—	32GHZ 1FT SP INTEGRATED ANTENNA
	3DB 03803 AA—	32GHZ 2FT SP INTEGRATED ANTENNA
38	3DB 00656 AA—	38GHZ 1FT SP INTEGRATED ANTENNA
	3DB 00657 AA—	38GHZ 2FT SP INTEGRATED ANTENNA

2–3.7 Coupler part list

Refer to point **c)** on page 30 for the item description.

Tab. 33. Coupler part list

NOTE ON ANV P/N The last two ANV-P/N letters stand for a ”feasible alternative”, they might differentiate two items even though still functionally compatible. For this reason the indicated ANV P/N does not include the last two letters.

Coupler	P/N according to frequency			
	11 GHz	**13, 15 GHz**	**18, 23, 25 GHz**	**28, 32, 38 GHz**
3 dB symmetrical coupler	3CC 14140 AA—	3CC 13472 AA—	3CC 13473 AA—	3CC 13474 AA—
10 dB symmetrical coupler	3CC 14140 AB—	3CC 13472 AB—	3CC 13473 AB—	3CC 13474 AB—

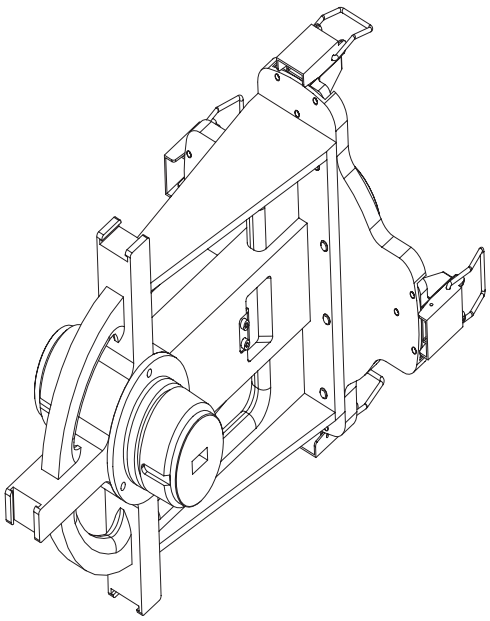

Fig. 23. ODU coupler

All rights reserved. Passing on and copying of this document, use and communication of its contents not permitted without written authorization from Alcatel.

All rights reserved. Passing on and copying of this document, use and communication of its contents not permitted without written authorization from Alcatel.

2–3.8 Part list of ODU accessories and installation materials

Tab. 34. Part list of ODU accessories and installation materials

Ref.[x] is used in other parts of this handbook to refer to the item

N.B. explanatory note in Tab. 35. herebelow

NOTE ON ANV P/N The last two ANV-P/N letters stand for a ”feasible alternative”, they might differentiate two items even though still functionally compatible. For this reason the indicated ANV P/N does not include the last two letters.

Ref.	ANV P/N (Factory P/N)	Name	Max Q.ty	N.B.
		EQUIPMENT ACCESSORIES FOR ODU		
	3CC 13476 AA—	SOLAR SHIELD	1	Fig. 24. page 86
[1]	3DB 05828 AA— (411.200.619)	SERVICE KIT USY/AWY	1	[i]
[2]	3CC 13477 AA—	Rx POWER MONITORING CABLE	1	[ii]
		INSTALLATION MATERIALS FOR ODU		
	1AB 12851 0002	NON INTEGRATED POLE MOUNTING	1	
	3CC 10752 AA—	INTEGRATED POLE MOUNTING	1	
	3DB 02223 AA—	11 GHz: WR90 ADAPTER KIT	1	[iii]
	1AB 14609 0001	13–15 GHz: WR62 NOSE ADAPTER (NOT INT ANTENNA)	1	[iii]
	1AB 14609 0002	18–23–25 GHz NOSE ADAPTER	1	[iii]
	3DB 02082 AA—	28–32–38 GHz NOSE ADAPTER	1	[iii]

Tab. 35. Notes to Tab. 34.

N.B.	Explanation
[i]	Portable Service Kit for ODU transceiver (PSK). To supply in Q.ty 1 for each link. See para.2–6.2 on page 117 for details.
[ii]	This item includes a cable used to connect the ODU to the PSK and to a digital multimeter so as to have a dc voltage proportional to the RF Rx level. See para.2–6.3 on page 120 for details.
[iii]	The Nose Adapter must be provided with the configurations with separated antenna and must be installed on the ODU and connected to the antenna.

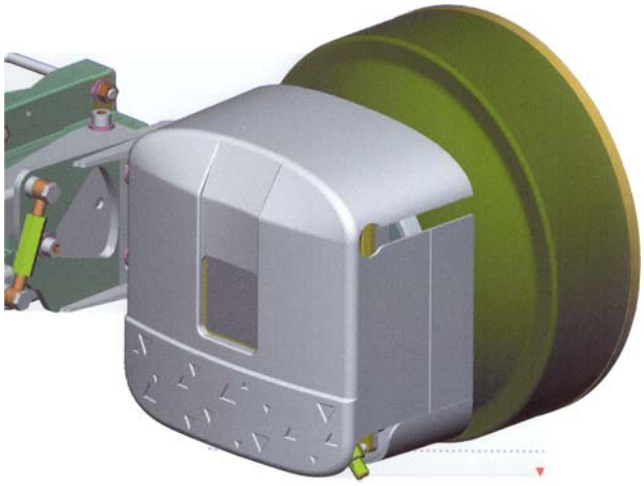

Fig. 24. ODU solar shield

All rights reserved. Passing on and copying of this document, use and communication of its contents not permitted without written authorization from Alcatel.

All rights reserved. Passing on and copying of this document, use and communication of its contents not permitted without written authorization from Alcatel.

2–4 IDU OPERATIVE INFORMATION

This chapter gives detailed operative information regarding the IDU shelf's unit available with the equipment version this handbook issue is relevant to, for installation, commissioning and maintenance purposes. Information given is relevant to assembly/subassembly and front panel drawings, as well as the usage description of the access points (connectors, visual indicators, buttons). This chapter is organized as follows:

– **Cautions to avoid equipment damage** on page 88

– **Access unit** on page 89

– **Main IDU unit** on page 100

– **Flash Card** on page 106

– **Extension IDU unit** on page 109

– **Fans unit** on page 112

N.B. For detailed operative information regarding:

– equipment installation and commissioning, please refer to:
- 9400AWY Installation Handbook REF.[B] on page 244
- 9400AWY Line–up Guide REF.[C] on page 244

– equipment maintenance, please refer to section 3 – MAINTENANCE on page 129.

2–4.1 Cautions to avoid equipment damage

a) Antistatic protection device kit

When operating on boards out of the equipment shelf, this kit (see Fig. 88. on page 231) must be always warn and its termination must be connected to a grounded structure, to avoids the possible damage of the electronic devices for electrostatic discharges.

b) Board's extraction/insertion levers on ACCESS, MAIN IDU and EXTENSION IDU units

As shown in their drawings, these units are provided with levers to facilitate their extraction and insertion from/into the shelf. In turn, such levers are provided with screws that:

- must be loosened, before operating on levers for the unit extraction from the shelf; this prevents breakage of levers
- must be tightened, after the unit insertion in the shelf; this ensures the equipment EMI–EMC performance.

c) Unit assemblies

Each of the ACCESS, MAIN IDU, EXTENSION IDU and FANS unit assembly ("main board" + "baby board(s)" + "front plate") must be considered an unique item from the service and maintenance points of view. Such an assembly is supplied by Alcatel "as it is" and **must never be disassembled**.

d) Screw fixing

All boards and dummy plates are provided with screws that, in normal operation conditions, must be always tightened onto the shelf to avoid their detachment and to ensure the equipment EMI–EMC performance and correct ventilation.
The screw tightening torque for fixing the units to the subrack must be:

2.8 kg x cm (0.28 Newton x m) ± 10 %

2.4317 in lb (0.2026 ft lb) ± 10 %

Exceeding this value may result in screw breaking.

All rights reserved. Passing on and copying of this document, use and communication of its contents not permitted without written authorization from Alcatel.

All rights reserved. Passing on and copying of this document, use and communication of its contents not permitted without written authorization from Alcatel.

2–4.2 Access unit

Refer to point **[1]** on page 27 for a **brief functional description** of the unit.

The following information is given hereafter:

– Fig. 25. herebelow shows the **unit assembly view**

– para. 2–4.2.1 on page 90 describe the **unit front view**

– para. 2–4.2.2 on page 90 describe the **external interfaces**

N.B. No hardware presettings are present on the unit.

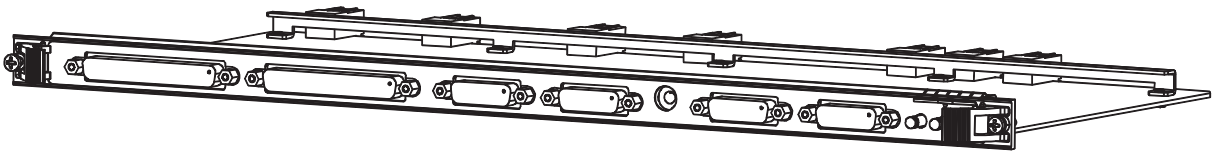

Board P/N: REF.**[7]** in Tab. 14. on page 60.

Fig. 25. Access Unit assembly view

2–4.2.1 Access unit front view and access points

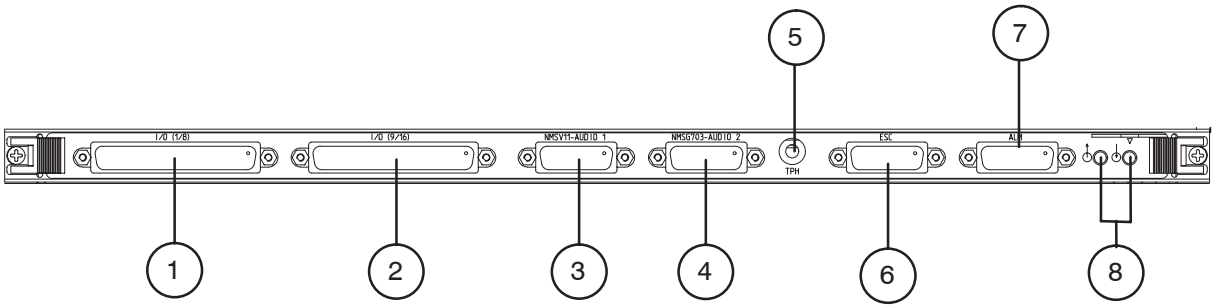

LEGEND:

(1) – Tributaries # 1 to 8
(2) – Tributaries # 9 to 16
(3) – NMS_V.11 – Audio 1
(4) – NMS_G.703 – Audio 2
(5) – EOW handset
(6) – Service channel
(7) – Alarms Housekeeping
(8) – E3

Board P/N: REF.**[7]** in Tab. 14. on page 60.

Fig. 26. Access Unit front view

2–4.2.2 Summary of Access unit external interfaces

The external interfaces are listed in the following table, with the corresponding connector.

Tab. 36. Access Unit external interfaces

Ref. Fig. 26.	see para.	Interface	Connector	
(1)	2–4.2.2.1 on page 91	8E1 – 32 wires	1xSubD 37	Female
(2)	2–4.2.2.2 on page 92	8E1 – 32 wires	1xSubD 37	Female
(3)	2–4.2.2.3 on page 93	NMS V.11 + Audio 1	SubD 15	Female
(4)	2–4.2.2.4 on page 94	NMS G.703 + Audio 2	SubD 15	Female
(5)	chapter 3–2 on page 133	EOW telephone	Jack	–
(6)	2–4.2.2.5 on page 95	User Service Channels	SubD 15	Female
(7)	2–4.2.2.6 on page 96	Alarms – Housekeeping	SubD 15	Female
(8)	2–4.2.2.7 on page 99	E3	2x(coax. 1.0/2.3)	–

All rights reserved. Passing on and copying of this document, use and communication of its contents not permitted without written authorization from Alcatel.

All rights reserved. Passing on and copying of this document, use and communication of its contents not permitted without written authorization from Alcatel.

2–4.2.2.1 Main tributaries (1 to 8) connector pin–out

Present on the front panel of the Access Unit (position **(1)** in Fig. 26. on page 90).

For E1 tributaries the same input and output wires are used for 120 ohm (balanced) and 75 ohm (unbalanced) (see Tab. 37. herebelow); the selection between the two options is possible with CT/OS.

Tab. 37. I/O (tributaries 1/8) pin–out

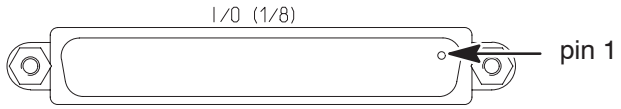

Description			Pin #	Pin #	Description		
Not Used			1	20	Not Used		
IN+	Trib.	1	2	21	IN–	Trib.	1
IN+	Trib.	2	3	22	IN–	Trib.	2
IN+	Trib.	3	4	23	IN–	Trib.	3
IN+	Trib.	4	5	24	IN–	Trib.	4
IN+	Trib.	5	6	25	IN–	Trib.	5
IN+	Trib.	6	7	26	IN–	Trib.	6
IN+	Trib.	7	8	27	IN–	Trib.	7
IN+	Trib.	8	9	28	IN–	Trib.	8
	GND		10	29	Not Used		
Not Used			11				
Out+	Trib.	1	12	30	Out–	Trib.	1
Out+	Trib.	2	13	31	Out–	Trib.	2
Out+	Trib.	3	14	32	Out–	Trib.	3
Out+	Trib.	4	15	33	Out–	Trib.	4
Out+	Trib.	5	16	34	Out–	Trib.	5
Out+	Trib.	6	17	35	Out–	Trib.	6
Out+	Trib.	7	18	36	Out–	Trib.	7
Out+	Trib.	8	19	37	Out–	Trib.	8
N.B. in 75 ohm unbalanced configuration ”Out– Trib.n” is the ground of ”Trib.n”.							

For system wiring solutions, refer to chapter 2–5 on page 113 **Distributor subracks**

2–4.2.2.2 Main tributaries (9 to 16) connector pin–out

Present on the front panel of the Access Unit (position **(2)** in Fig. 26. on page 90).

For E1 tributaries the same input and output wires are used for 120 ohm (balanced) and 75 ohm (unbalanced) (see Tab. 38. herebelow); the selection between the two options is possible with CT/OS.

Tab. 38. I/O (tributaries 9/16) pin–out

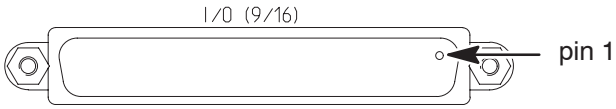

Description			Pin #	Pin #	Description		
Not Used			1	20	Not Used		
IN+	Trib.	9	2	21	IN–	Trib.	9
IN+	Trib.	10	3	22	IN–	Trib.	10
IN+	Trib.	11	4	23	IN–	Trib.	11
IN+	Trib.	12	5	24	IN–	Trib.	12
IN+	Trib.	13	6	25	IN–	Trib.	13
IN+	Trib.	14	7	26	IN–	Trib.	14
IN+	Trib.	15	8	27	IN–	Trib.	15
IN+	Trib.	16	9	28	IN–	Trib.	16
	GND		10	29	Not Used		
Not Used			11				
Out+	Trib.	9	12	30	Out–	Trib.	9
Out+	Trib.	10	13	31	Out–	Trib.	10
Out+	Trib.	11	14	32	Out–	Trib.	11
Out+	Trib.	12	15	33	Out–	Trib.	12
Out+	Trib.	13	16	34	Out–	Trib.	13
Out+	Trib.	14	17	35	Out–	Trib.	14
Out+	Trib.	15	18	36	Out–	Trib.	15
Out+	Trib.	16	19	37	Out–	Trib.	16

N.B. In 75 ohm unbalanced configuration ”Out– Trib.n” is the ground of ”Trib.n”.

For system wiring solutions, refer to chapter 2–5 on page 113 **Distributor subracks**

All rights reserved. Passing on and copying of this document, use and communication of its contents not permitted without written authorization from Alcatel.

All rights reserved. Passing on and copying of this document, use and communication of its contents not permitted without written authorization from Alcatel.

2–4.2.2.3 NMS V.11 – Audio 1 (pin–out and description)

Present on the front panel of the Access Unit (position **(3)** in Fig. 26. on page 90).

The ”(NMS–V11+Audio 1)” connector has 9 pins dedicated to NMS and 6 pins dedicated to EOW analog party line.

Tab. 39. NMS–V.11 + Audio 1 connector pin–out

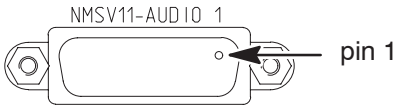

Description	Pin #	Pin #	Description
RS422 data in (+)	1	9	RS422 data in (–)
RS422 clock in (+)	2	10	RS422 clock in (–)
RS422 data out (+)	3	11	RS422 data out (–)
RS422 clock out (+)	4	12	RS422 clock out (–)
GND NMS	5	13	Audio1 signal from user (–)
Audio1 signal from user (+)	6	14	Audio1 signal to user (–)
Audio1 signal to user (+)	7	15	Not used
GND Audio	8		

2–4.2.2.4 NMS G.703 – Audio 2 (pin–out and description)

Present on the front panel of the Access Unit (position **(4)** in Fig. 26. on page 90).

The ”(NMS–G703+Audio 2)” connector has 5 pins dedicated to NMS and 6 pins dedicated to EOW analog party line.

Tab. 40. NMS–G.703 + Audio 2 connector pin–out

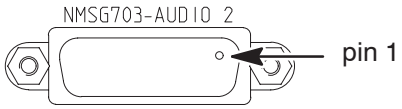

Description	Pin #	Pin #	Description
G703 data in (+)	1	9	G703 data in (–)
Not used	2	10	Not used
G703 data out (+)	3	11	G703 data out (–)
Not used	4	12	Not used
GND NMS	5	13	Audio2 signal from user (–)
Audio2 signal from user (+)	6	14	Audio2 signal to user (–)
Audio2 signal to user (+)	7	15	Not used
GND Audio	8		

All rights reserved. Passing on and copying of this document, use and communication of its contents not permitted without written authorization from Alcatel.

All rights reserved. Passing on and copying of this document, use and communication of its contents not permitted without written authorization from Alcatel.

2–4.2.2.5 User service channels (pin–out and description)

Present on the front panel of the Access Unit (position **(6)** in Fig. 26. on page 90).

The 64 kbit/s service channel can be configured with CY/OS in the following way:

– G.703 co–directional

– V.11 co–directional

– V.11 contra–directional.

The pin function is shown in the table below.

Tab. 41. User 64 kbit/s service channel connector pin–out

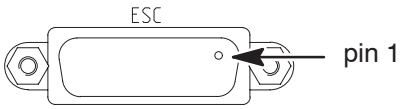

Pin #	Signal	Direction
2	COD_Rx+ (G.703)	INPUT
9	COD_Rx– (G.703)	INPUT
3	COD_Tx+ (G.703)	OUTPUT
10	COD_Tx– (G.703)	OUTPUT
4	Rx_ASY (V.28 – not used)	INPUT
11	Tx_ASY(V.28 – not used)	OUTPUT
5	DATA_Rx+ (V.11)	INPUT
12	DATA _Rx– (V.11)	INPUT
6	Rx_CK+ (V.11)	BIDIRECTIONAL
13	Rx_CK– (V.11)	BIDIRECTIONAL
7	DATA _Tx+ (V.11)	OUTPUT
14	DATA _Tx– (V.11)	OUTPUT
8	CC_TCK+ (V.11)	OUTPUT
15	CC_TCK– (V.11)	OUTPUT
1	GND	/

2–4.2.2.6 Alarms Housekeeping (pin–out and description)

Present on the front panel of the Access Unit (position **(7)** in Fig. 26. on page 90).

The “Alarms–Housekeeping” SubD15 connector (pinout in Tab. 42. below) is divided in:

- 3 summarizing discrete alarms – equipment outputs (A_1 to A_3); see point **[1]** herebelow
- 4 housekeeping controls – equipment outputs (HK_O1 to HK_O4); see point **[2]** on page 97
- 6 housekeeping alarms – equipment inputs (HK_I1 to HK_I6; see point **[4]** on page 98
- 1 common wire (COM);
- 1 ground (GND).

Tab. 42. Alarms Housekeeping connector pin–out

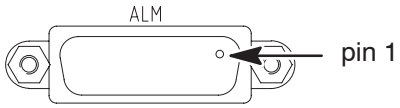

Pin	Signal	Direction
6	HK_I1	INPUT
13	HK_I2	INPUT
7	HK_I3	INPUT
14	HK_I4	INPUT
8	HK_I5	INPUT
15	HK_I6	INPUT
4	HK_O1	OUTPUT
11	HK_O2	OUTPUT
5	HK_O3	OUTPUT
12	HK_O4	OUTPUT
9	COM	
1	A_1	OUTPUT
2	A_2	OUTPUT
3	A_3	OUTPUT
10	GND	/

[1] SUMMARIZING DISCRETE ALARMS

The 3 summarizing discrete alarms (equipment outputs) are defined as follows:

A_1 IDU HW Failure alarm (= IDU Main (or Extension unit) Card fail/missing + Loss of IDU–ODU cable + Loss of Tributaries)

A_2 ODU Main Failure alarm (= ODU Tx Failure + ODU Rx Failure)

A_3 ODU Spare Failure alarm

For electrical characteristics refer to point **[3]** on page 97.

All rights reserved. Passing on and copying of this document, use and communication of its contents not permitted without written authorization from Alcatel.

All rights reserved. Passing on and copying of this document, use and communication of its contents not permitted without written authorization from Alcatel.

[2] HOUSEKEEPING CONTROLS

For the 4 housekeeping controls (equipment outputs), it is possible to choose through CT not only the manual setting of each one of them, but also the association to one of the system alarms available in the CT menu lists (including: Major Alarm, Minor Alarm, Loss of Tributaries, Loss of IDU–ODU cable, Remote Defect Indication, Local Defect Indication, ODU alarm, Service Affecting Alarm, Signal Failure Alarm).
For electrical characteristics refer to point **[3]** herebelow.

[3] SUMMARIZING DISCRETE ALARMS & HOUSEKEEPING CONTROLS ELECTRICAL CHARACTERISTICS

The presence of an active output alarm corresponds to a closed *relay* contact with a *common* wire. The *relay* is compliant with the following electrical specification:

- alarm present ⇒ the *relay* is ”closed”: $|V_2| \leq 2V$, $|I_2| \leq 50mA$ (the limit on the current defines the maximum current supported by the IDU circuit)
- alarm not present ⇒ the *relay* is ”open”: $|I_2| \leq 0.2mA$, $|V_2| \leq 60V$
  The limit on the voltage means that the customer is not allowed to force in this condition too large V_2.

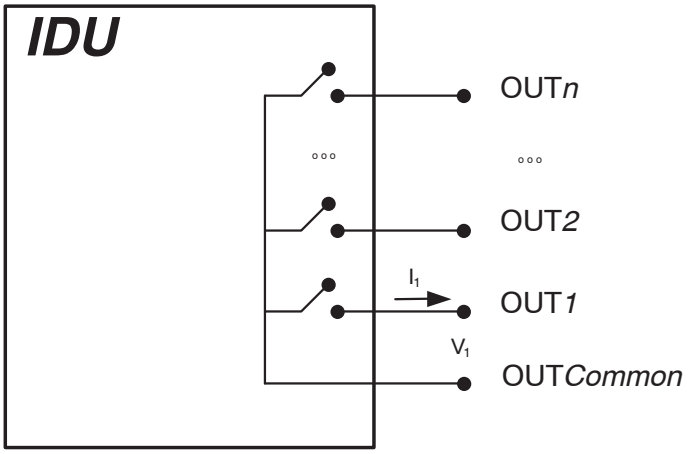

Fig. 27. Equipment outputs (summarizing and housekeeping)

Note 1: logic can be independently changed for each input and output (the relay is ”closed” when the alarm is not present and is ”opened” when the alarm is present) through CT configuration while for Summarizing outputs the default configuration is the only possibility.

Note 2: when the power supply is down (and also when the power supply is on, but the SW hasn’t yet initialized the HW), all the relays of the outputs of the alarms/housekeeping are in the ”open” state (HW default condition).

[4] EQUIPMENT INPUTS

The IDU is able to detect the status of ”commands” coming from customer’s circuits.
A *common (in)* signal is supplied by the customer’s circuit, and this signal is different from the one defined for *equipment outputs*.
The customer can use two different schemes to provide the command:
[case 1] relay
[case 2] open collector

Case 1 (relay)

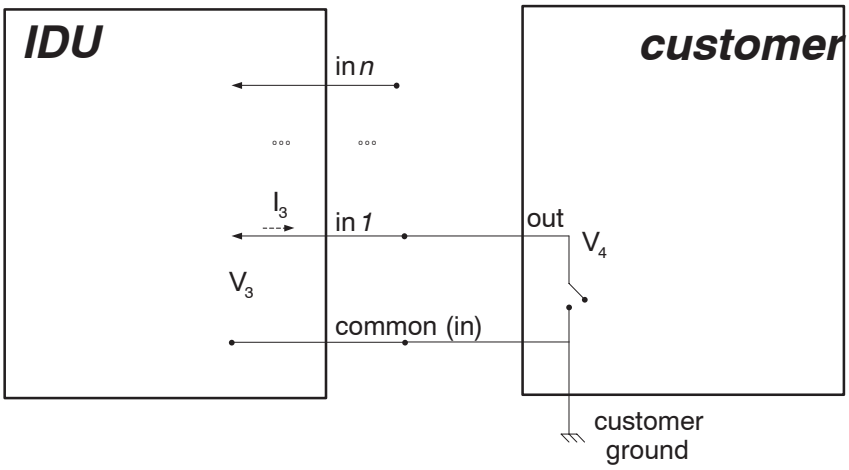

Fig. 28. Equipment inputs – relay scheme

- alarm present ⇒ the customer *relay* is ”closed”: $-2V \leq V_3 \leq 0V$, $|I_3| \leq 10mA$
  This means that the customer’s circuit guarantees that $|V_3| \leq 2V$ and is allowed to drain from the IDU a 10mA max current;
- alarm not present ⇒ the customer *relay* is ”open”: $|I_3| \leq 0.2mA$. This means that the maximum current drained by the customer’s circuit is 0.2mA.

Case 2 (open collector)

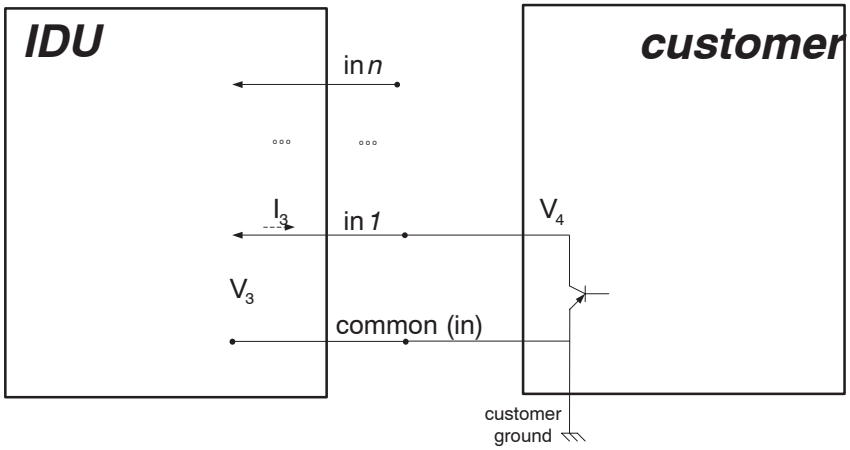

Fig. 29. Equipment inputs – open collector scheme

The IDU supplies a suitable negative voltage to the customer’s circuit:
- alarm present ⇒ the customer transistor conduces (= ”closed”): $-2V \leq V_4 \leq 0V$, $|I_3| \leq 10mA$.
- alarm not present ⇒ the customer transistor doesn’t conduce (=”open”): $|I_3| \leq 0.2mA$.
  This limits the max current that the customer’s circuit can drain.

All rights reserved. Passing on and copying of this document, use and communication of its contents not permitted without written authorization from Alcatel.

All rights reserved. Passing on and copying of this document, use and communication of its contents not permitted without written authorization from Alcatel.

2–4.2.2.7 Main tributary E3

Present on the front panel of the Access Unit (position **(8)** in Fig. 26. on page 90).

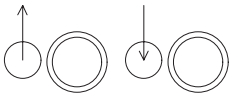

Two 1.0 /2.3 Siemens connectors are dedicated to the E3 input/output; the impedance is 75 ohm unbalanced. The line code is HDB3.

If the connector required is a BNC, a suitable adapter must be used. The adapter is a 6 cm cable with a 1.0/2.3 ”locking” connector and a BNC connector.

2–4.3 Main IDU unit

Refer to point **[2]** on page 27 for a **brief functional description** of the unit.

The following information is given hereafter:

- para. 2–4.3.1 herebelow describes the **unit assembly**
- para. 2–4.3.2 on page 101 describes the **unit front view**

N.B. No hardware presettings are present on the unit.

2–4.3.1 Main IDU unit assembly

Following Fig. 30. and Fig. 31. show respectively Main IDU Unit assembly view and front view.

N.B. **Main IDU Unit** and **Extension IDU Unit** have the same front panel, but their functions are different. Such boards can be distinguished from each other by:

- the P/N (it is present on the main board top side, just near the front plate
- the presence, in the **Main IDU Unit**, of the EQUIPMENT CONTROLLER BABY BOARD, that is not present in the **Extension IDU Unit** (see Fig. 34. on page 109).

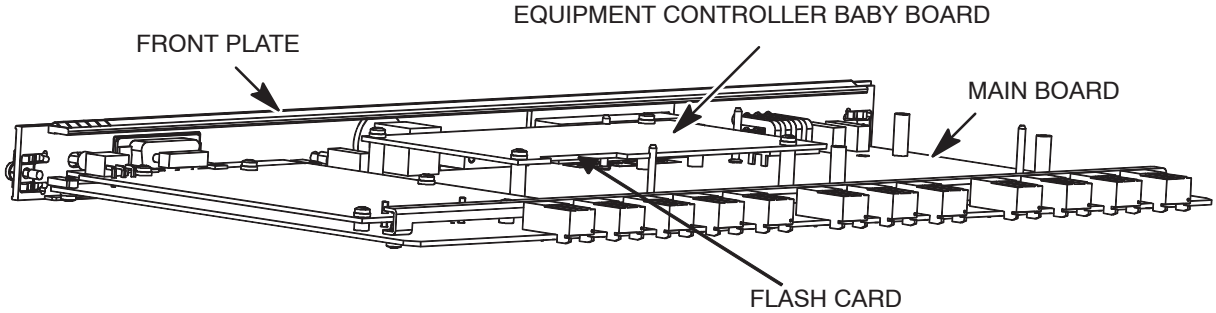

Board P/N: REF.**[8]** in Tab. 14. on page 60.

Fig. 30. Main IDU Unit assembly view

Fig. 30. above shows the position of the **FLASH CARD** inside the EQUIPMENT CONTROLLER BABY BOARD.
Detailed information on **FLASH CARD** is given in para.2–4.4 on page 106.

All rights reserved. Passing on and copying of this document, use and communication of its contents not permitted without written authorization from Alcatel.

All rights reserved. Passing on and copying of this document, use and communication of its contents not permitted without written authorization from Alcatel.

2–4.3.2 Main IDU unit front view and access points

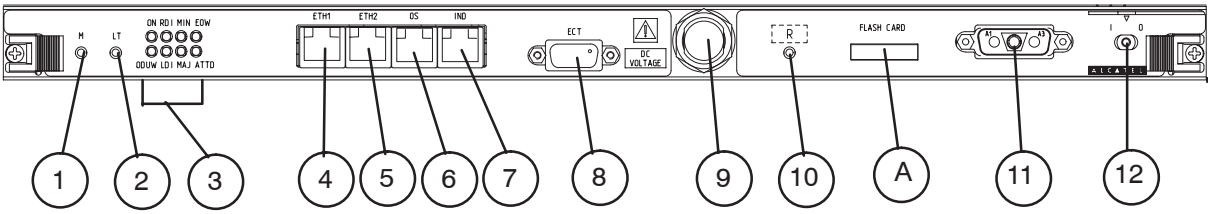

Board P/N: REF.**[8]** in Tab. 14. on page 60.

Tab. 43. Main Unit external interfaces

Ref. Fig. 31.	Connector or item detail	Interface / Explanation	Details
(1)	M	Alarm attending pushbutton: this pushbutton turns OFF LEDs MAJ/MIN and turns ON yellow LED ATTD	para.3–5.5.2.2 on page 158
(2)	LT	Lamp Test pushbutton: it allows to HW test the LEDs of the unit	para.3–4.2.1 on page 147
(3)	–	LEDs	para.2–4.3.2.1 on page 102
(4) & (5)	ETH1 ETH2	(4) – Ethernet 1 port (5) – Ethernet 2 port RJ45 NOT USED with SWP 1.0	
(6)	RJ45	OS (or ECT) 10/100BaseT	para.2–4.3.2.3 on page 104
(7)	IND	Debug RJ45 for Factory use only	
(8)	SubD 9	ECT – RS232	para.2–4.3.2.2 on page 103
(9)	N 50 ohm	for IDU–ODU cable	para.2–4.3.2.5 on page 105
(10)	R	Equipment Controller Reset pushbutton	possible use inside corrective maintenance
(11)	SubD 3 (male)	Station Battery input	para.2–4.3.2.4 on page 105
(12)	I O	ON/OFF switch: general power supply switch	I ⇒ ON O ⇒ OFF
(A)		Flash Card identifier	para.2–4.3.2.6 on page 105

Fig. 31. Main IDU Unit front view

2–4.3.2.1 LEDs summary

Eight LEDs are present on the front panel of the Main IDU Unit (position **(3)** in Fig. 31. on page 101):

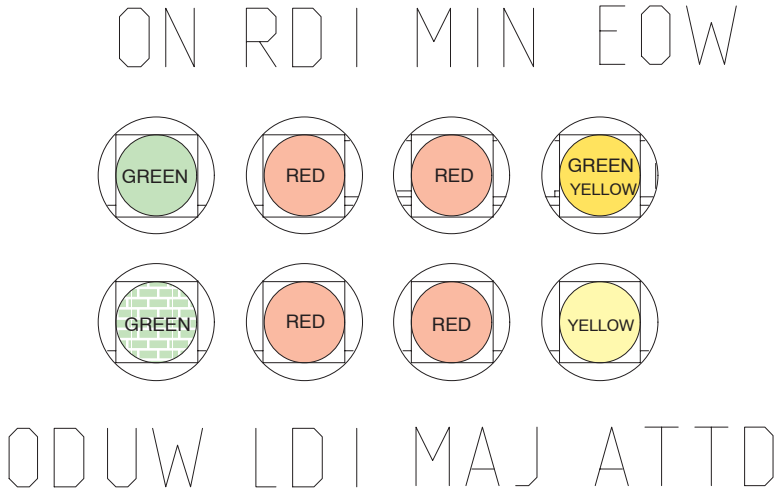

1) ON = Power ON (green)
2) RDI = Remote Defect Indication (red)
3) MIN = Minor Alarm (red)
4) EOW = Engineering Order Wire (bicolor: yellow if busy; green if free)
5) ODU W = ODU Working (green)
6) ATTD = Attended (yellow)
7) MAJ = Major Alarm (red)
8) LDI = Local Defect Indication (red)

Fig. 32. LEDs on the Main Unit Front Panel

[1] This green LED is ON when the Station Battery is connected, the ON/OFF switch is ON, and the internal DC/DC is working properly.

[2] The Remote Defect Indication (RDI) is a local indication of the Remote Equipment Failure alarms requiring consequent operator intervention. It is transmitted from the remote station to the local via the aggregate radio frame.
In 1+0 configuration RDI is generated in the remote station by the following alarm roots:

- Rx Muldem Failure
- Loss of Tributary Signal
- ODU transmitted/received power alarm (Tx Fail/Rx Fail)
- ODU incompatible Tx power alarm
- ODU Rx failure (Fail_Rx_ODU)

In 1+1 configuration RDI is generated in the remote station by the following alarm roots:

- Main and/or Spare Rx failure
- Tx failure in Main or Spare Board
- Main/Spare card missing
- Loss of Tributary Signal
- Loss of cable from one of the two ODUs
- EPS Tx/Rx failure
- Fan Unit card fail/missing
- ODUs transmitted/received power alarm (Tx Fail / Rx Fail)
- ODUs incompatible Tx frequency/power alarm
- ODUs Rx failure (Fail_Rx_ODU)
- Tx failure in one of the two IDU

All rights reserved. Passing on and copying of this document, use and communication of its contents not permitted without written authorization from Alcatel.

All rights reserved. Passing on and copying of this document, use and communication of its contents not permitted without written authorization from Alcatel.

[3] Minor Alarm is the sum of the alarms to which the customer associates Low Severity weight through CT

[4] This LED refers to the use of the EOW. Refer to chapter 3–2 on page 133 for details.

[5] The ODU W LED identifies ODU Tx activity. This LED is active in 1+1 HSB configuration and if ON indicates that the transmitter is connected to the antenna.

[6] The attended LED is ON when the acknowledgement button has been pushed

[7] Major Alarm is the sum of the alarms to which the customer associates High Severity weight through CT

[8] The Local Defect Indication (LDI) has the purpose to show Local Equipment Failure requiring consequent actions by operators. The LDI roots are:
- Tx/Rx Muldem 1/0 failure
- Loss of Signal of Tributaries
- Loss of Signal from ODU
- EPS Tx/Rx failure
- Fans unit failure
- ODU transmitted/received power alarm
- ODU power alarm
- ODU Tx/Rx failure (Card fail)

2–4.3.2.2 ECT RS232 connector pin–out

Present on the front panel of the Main IDU Unit (position **(8)** in Fig. 31. on page 101), and used to connect the Equipment Craft Terminal, through a suitable cable (supplied with the equipment).

Tab. 44. ECT connections

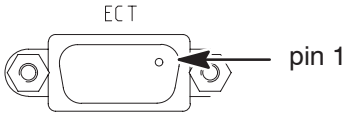

RS 232 (IDU MAIN side)	RS 232 (PC side)
1	1
2	2
3	3
4	4
5	5
6	6
7	7
8	8
9	9

2–4.3.2.3 OS (or ECT) 10/100BaseT connector pin–out

Present on the front panel of the Main IDU Unit (position **(6)** in Fig. 31. on page 101).

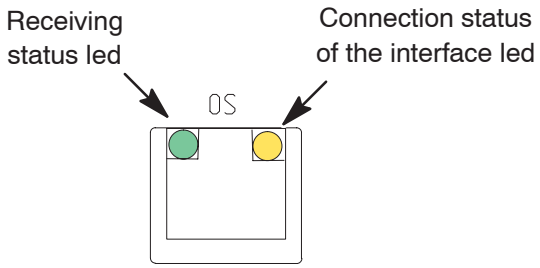

Tab. 45. OS (or ECT) connections

RJ45 (IDU MAIN side)	Signal	Color used	RJ45 (OS side)
1	Tx +	White/Orange	1
2	Tx –	Orange	2
3	Rx +	White/Green	3
4	Not used	Blue	4
5	Not used	White/Blue	5
6	Rx –	Green	6
7	Not used	White/Brown	7
8	Not used	Brown	8

Tab. 46. LEDs for Ethernet user data interfaces

Position	Display Function	Color	Status	Meaning
LEFT LED	Receiving status	Green	OFF	link down
			ON	link up
RIGHT LED	Connection status of the interface	Orange	OFF	no activity
			blinking	activity in TX or Rx

All rights reserved. Passing on and copying of this document, use and communication of its contents not permitted without written authorization from Alcatel.

All rights reserved. Passing on and copying of this document, use and communication of its contents not permitted without written authorization from Alcatel.

2–4.3.2.4 Power Supply connector pin–out

Present on the front panel of the Main IDU Unit (position **(11)** in Fig. 31. on page 101).
The same connector is present also on the front panel of the Extension IDU Unit (position **(11)** in Fig. 35. on page 110).

Tab. 47. Power supply connections

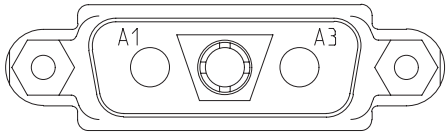

Pin	Function
A1	+ BATTERY
A2	GROUND
A3	– BATTERY

2–4.3.2.5 Connector for IDU–ODU cable

Present on the front panel of the Main IDU Unit (position **(9)** in Fig. 31. on page 101).
The same connector is present also on the front panel of the Extension IDU Unit (position **(9)** in Fig. 35. on page 110).

The ODU is connected to the IDU side through this connector (male N 90° – 50 ohm) by a suitable cable.

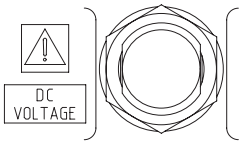

ATTENTION

(caution to avoid equipment damage)
The N–type connector carries +48 DC voltage for ODU power supply.
Do not connect measuring instruments directly.

2–4.3.2.6 Flash Card identifier

Present on the front panel of the Main IDU Unit (position **(A)** in Fig. 31. on page 101).

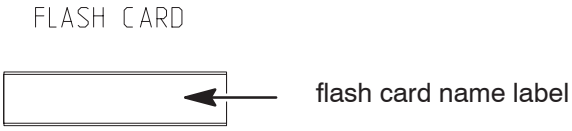

This label contains the **Flash Card Name** (see para.2–4.4.2 on page 106) of the Flash Card equipped inside the Main IDU Unit's EQUIPMENT CONTROLLER BABY BOARD (see Fig. 30. on page 100).

See also para.2–4.4.4 on page 108 – **Flash Card upgrade**.

2–4.4 Flash Card

2–4.4.1 General

Refer to point **[3]** on page 28 for a **brief functional description** of the unit.

The Flash Card is housed inside the Main IDU Unit's EQUIPMENT CONTROLLER BABY BOARD, as shown in Fig. 30. on page 100.
Fig. 33. herebelow shows the **FLASH CARD** profile and insertion direction

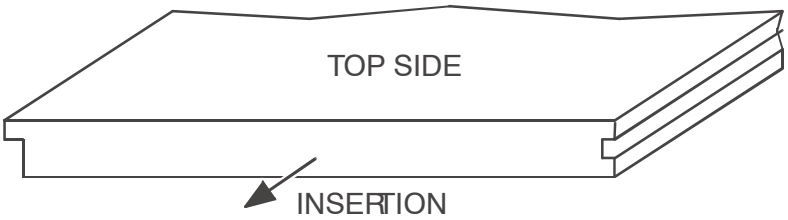

Fig. 33. FLASH CARD profile and insertion direction

2–4.4.2 Flash Card identification

The **P/Ns** for the possible Flash Card types are specified in the sublist **FLASH CARD** in Tab. 14. on page 60, which indicates, for each P/N, also the **Flash Card Name** :

a) the **Flash Card P/N** is reported on the label affixed on it;

b) moreover, the **Flash Card Name** is affixed on the label present on the front panel of the Main Unit (position **(A)** in Fig. 31. on page 101).

All rights reserved. Passing on and copying of this document, use and communication of its contents not permitted without written authorization from Alcatel.

All rights reserved. Passing on and copying of this document, use and communication of its contents not permitted without written authorization from Alcatel.

2–4.4.3 Flash Card contents

The following table indicates the FLASH CARD contents in the various phases of SW management (for more details refer to the C.T. Operator's Handbook):

PHASE	BASE CONFIGURATION	SW PROGRAMS	NE DATA	
			ROUTING CONFIGURATION **n.b.2**	MIB **n.b.1**
1) As supplied by Factory	Defined by **Flash Card P/N**. Not changeable, but with **Flash Card upgrade** (see para.2–4.4.4 on page 108)	Not present	Not present	Not present
2) After SWP download		Present	To be defined by C.T.	To be defined by C.T.
3) After NE data definition			Present	Present
MODIFICABILITY⇒		By a new SWP download **n.b.4**	Yes, by C.T.	Yes, by C.T.
SAVE/RESTORE⇒	NO	Unmeaningful	NO	NO **n.b.3**
NE= Network Element C.T. = Craft Terminal SWP= Software Package				

n.b.1 **MIB**
The system configuration data set is named MIB. Such data are defined by Craft Terminal after the SWP download (refer to the C.T. Operator's Handbook for details). They can be changed only within the limits implicitly defined by the employed Flash Card type. For its save/restore refer to **n.b.3** herebelow.

n.b.2 **ROUTING CONFIGURATION DATA**
This list is merely for general information only. Refer to the C.T. Operator's Handbook for a more precise list:

1. Local configuration ⇒ System's local address
2. NTP server configuration
3. Interface configuration ⇒ NMS configuration
   ⇒ Ethernet configuration
4. IP configuration ⇒ IP Static Routing configuration
   ⇒ OSPF AREA configuration

All those listed parameter are NOT stored into the MIB file because considered unique to a particular system in a network and are NOT meant to be reproduced on other systems in the same network because will cause conflicts in the supervision network centre.

n.b.3 The MIB file save/restore to/from a file in the Craft Terminal (or OS) environment is not possible in SWP first version(s). It should be possible in future versions(s). Refer to the C.T. Operator's Handbook for details.

n.b.4 A new SWP download is envisaged whenever a new SWP package version or release (new with respect to that presently loaded in the system) is supplied to Customer (*). Refer to the C.T. Operator's Handbook for details.

(*) for the meaning of SWP package version and release refer to para.B.2.2.2 on page 247.

2–4.4.4 Flash Card upgrade

Whenever the basic configuration of the 9400AWY NE must be upgraded, Customer must order a new Flash Card type, consistent with the equipment configuration He wants.

The Flash Card is supplied with a self–adhesive label containing the **Flash Card Name** (see point b) in para.2–4.4.2 on page 106).

After having got the new Flash Card, the phases for the Flash Card upgrading are:

[1] get the new Flash Card; leave it in its protective envelope until you have worn the antistatic protection armlet

[2] wear the antistatic protection armlet (see Fig. 88. on page 231) and connect its termination to a grounded structure

[3] turn off (position “O”) the Main IDU Unit switch (position **(12)** in Fig. 31. on page 101)

[4] disconnect all cables from the Main IDU Unit front panel. Suggestion: before doing it, if no labels are present on the cables, put labels with markings to be able to reconnect them correctly.

[5] unscrew the two screws on the Main IDU Unit sides

[6] extract the Main IDU Unit by using the levers on the sides

[7] extract the old Flash Card from the Main IDU Unit and insert the new one
Refer to:
- Fig. 30. on page 100 for the position of the **FLASH CARD** inside the EQUIPMENT CONTROLLER BABY BOARD
- Fig. 33. on page 106 for Flash Card profile and insertion direction

[8] get the new **Flash Card Name** self–adhesive label and stick it over the older one (position **(A)** in Fig. 31. on page 101); (**N.B**. if possible, remove the older self–adhesive label before sticking the newer)

[9] insert the Main IDU Unit by using the levers on its sides

[10] now you can take off the antistatic protection armlet

[11] screw the two screws on the sides of the Main IDU Unit

[12] connect again all the cables on the Main IDU Unit front panel exactly as they were connected before the unit was extracted

[13] turn on (position “I”) the Main IDU Unit switch (position **(12)** in Fig. 31. on page 101)

[14] now you must perform all operations regarding the NE SW download and data definition, as it is was done at the equipment SW first time installation:

- SWP download from C.T. to NE
- NE configuration data definition

as explained in C.T. Operator’s Handbook.

All rights reserved. Passing on and copying of this document, use and communication of its contents not permitted without written authorization from Alcatel.

All rights reserved. Passing on and copying of this document, use and communication of its contents not permitted without written authorization from Alcatel.

2–4.5 Extension IDU unit

Refer to point **[4]** on page 28 for a **brief functional description** of the unit.

The following information is given hereafter:

- para. 2–4.5.1 herebelow describes the **unit assembly**
- para. 2–4.5.2 on page 110 describe the **unit front view**

N.B. No hardware presettings are present on the unit.

2–4.5.1 Extension IDU unit assembly

Following Fig. 34. and Fig. 35. show respectively Extension IDU Unit assembly view and front view.

N.B. **Main IDU Unit** and **Extension IDU Unit** have the same front panel, but their functions are different. Such boards can be distinguished from each other by:

– the P/N (it is present on the main board top side, just near the front plate

– the presence, in the **Main IDU Unit**, of the EQUIPMENT CONTROLLER BABY BOARD (see Fig. 30. on page 100), that is not present in the **Extension IDU Unit**.

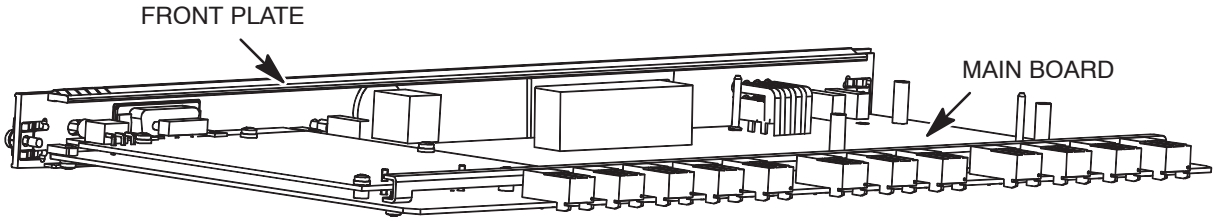

Board P/N: REF.**[9]** in Tab. 14. on page 60.

Fig. 34. Extension IDU Unit assembly view

2–4.5.2 Extension IDU unit front view and access points

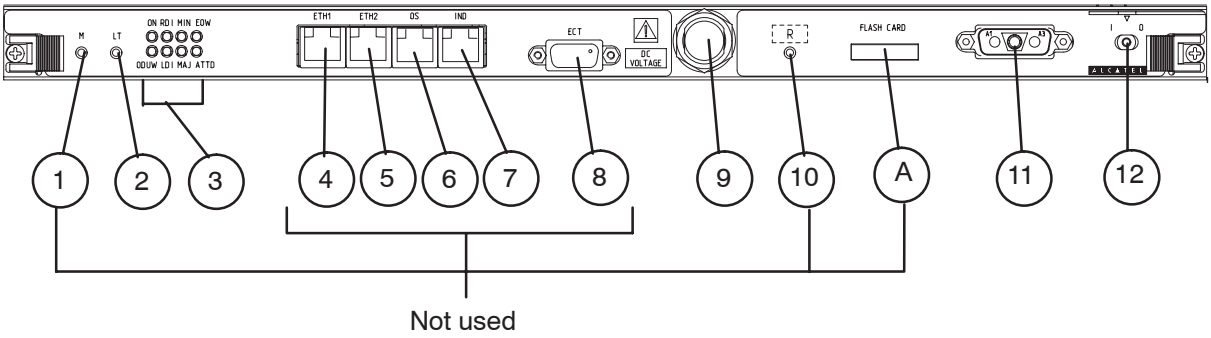

Board P/N: REF.**[9]** in Tab. 14. on page 60.

Tab. 48. Extension Unit external interfaces

N.B. Only the used connectors / items are described.

Ref. Fig. 35.	Connector or item detail	Interface / Explanation	Details
(2)	LT	Lamp Test pushbutton: it allows to HW test the LEDs of the unit	para.3–4.2.1 on page 147
(3)	–	LEDs	para.2–4.5.2.1 on page 111
(9)	N 50 ohm	for IDU–ODU cable	para.2–4.5.2.2 on page 111
(11)	SubD 3 (male)	Station Battery input	para.2–4.5.2.3 on page 111
(12)	I O	ON/OFF switch: general power supply switch	I ⇒ ON O ⇒ OFF

Fig. 35. Extension IDU Unit front view

All rights reserved. Passing on and copying of this document, use and communication of its contents not permitted without written authorization from Alcatel.

All rights reserved. Passing on and copying of this document, use and communication of its contents not permitted without written authorization from Alcatel.

2–4.5.2.1 LEDs summary

Eight LEDs are present on the front panel of the Extension IDU Unit. Only two of them are used:

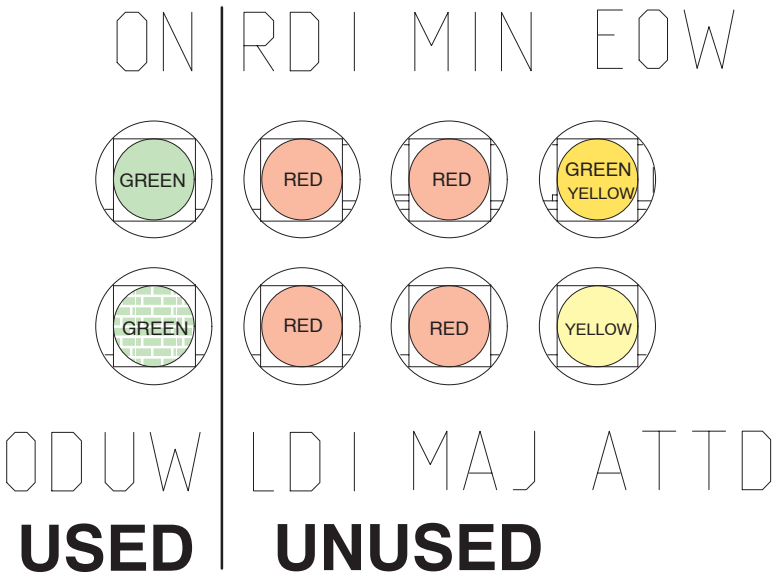

1) ON	=	Power ON (green) This green LED is ON when the Station Battery is connected, the ON/OFF switch is ON, and the internal DC/DC is working properly.
2) RDI	=	Not used
3) MIN	=	Not used
4) EOW	=	Not used
5) ODU W	=	ODU Working (green). The ODU W LED identifies ODU Tx activity. This LED is active in 1+1 HSB configuration and if ON indicates that the transmitter is connected to the antenna.
6) ATTD	=	Not used
7) MAJ	=	Not used
8) LDI	=	Not used

Fig. 36. LEDs on the Extension IDU Unit front panel

2–4.5.2.2 Power Supply connector pin–out

Equal to that of the Main IDU Unit (see para.2–4.3.2.4 on page 105).

2–4.5.2.3 IDU/ODU connector

Equal to that of the Main IDU Unit (see para.2–4.3.2.5 on page 105).

2–4.6 Fans unit

Refer to point **[5]** on page 28 for a **brief functional description** of the unit.

N.B. No hardware presettings are present on the unit.

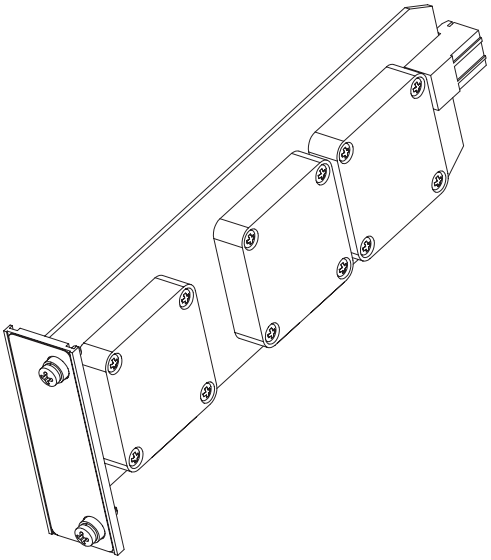

Board P/N: REF.**[10]** in Tab. 14. on page 60.

Fig. 37. Fans Unit assembly view

All rights reserved. Passing on and copying of this document, use and communication of its contents not permitted without written authorization from Alcatel.

All rights reserved. Passing on and copying of this document, use and communication of its contents not permitted without written authorization from Alcatel.

2–5 DISTRIBUTOR SUBRACKS

For the physical connection of the User signal cables to the **Main tributaries connectors** of the Access unit (see positions (1) and (2) in Fig. 26. on page 90, two main solutions are envisaged:

- usage of the Customer Plant Distributor racks, connected to the Access unit connectors by means of Customer own cables or cables supplied by Alcatel;
- usage of Alcatel distributor subracks, to be housed in the same rack where 9400AWY IDU shelf is installed. Following Fig. 38. thru' Fig. 41. show the types of Alcatel distributor subracks optionally available for this purpose.

For further information and detailed usage instructions, please refer to the 9400AWY Installation handbook.

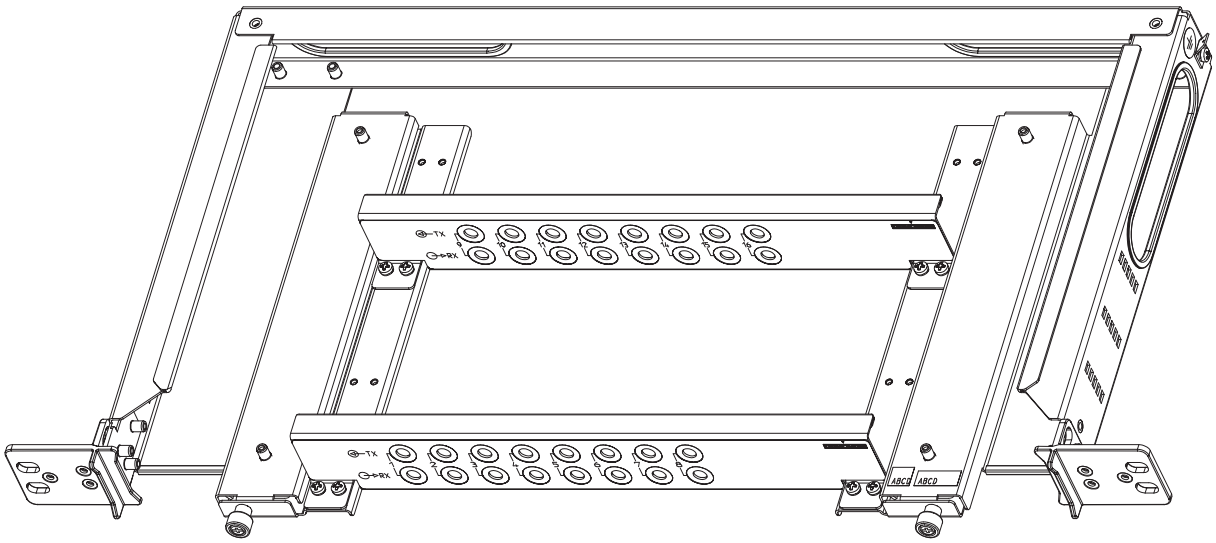

Assembly P/N: REF.**[3]** in Tab. 14. on page 60.

Fig. 38. Assembly view of DISTRIBUTOR SUBRACK FOR 1.0/2.3

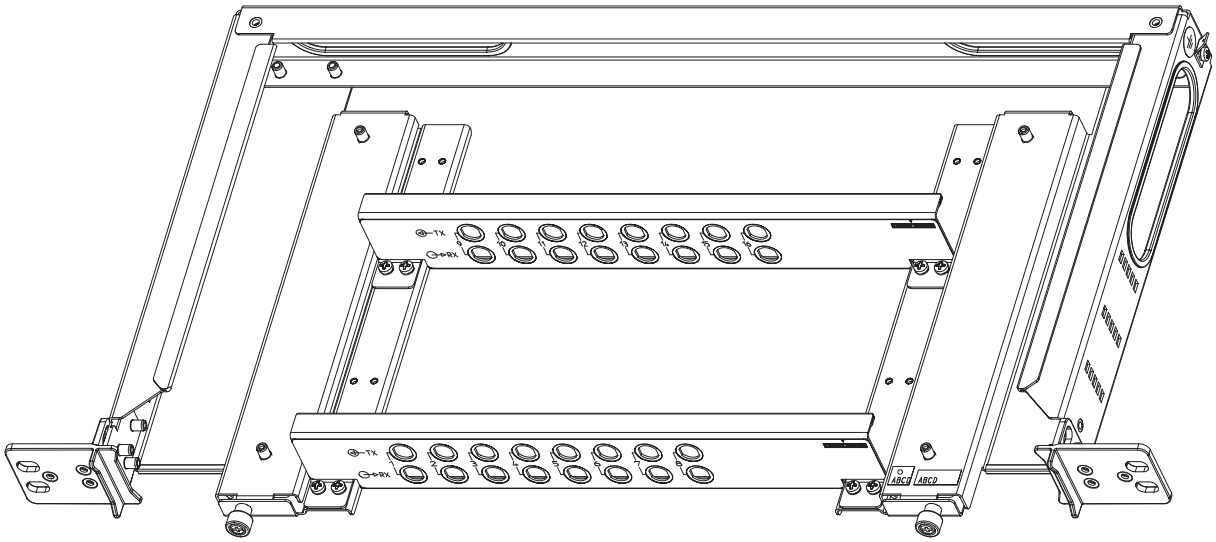

Assembly P/N: REF.**[4]** in Tab. 14. on page 60.

Fig. 39. Assembly view of DISTRIBUTOR SUBRACK FOR 1.6/5.6

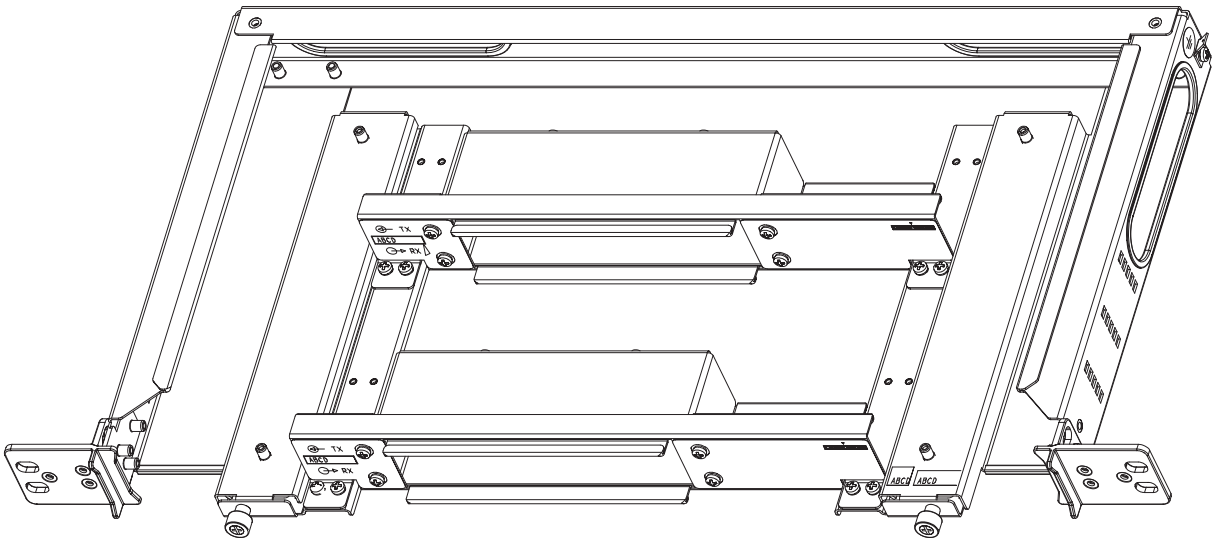

Assembly P/N: REF.**[5]** in Tab. 14. on page 60.

Fig. 40. Assembly view of DISTRIBUTOR SUBRACK FOR 120 OHM

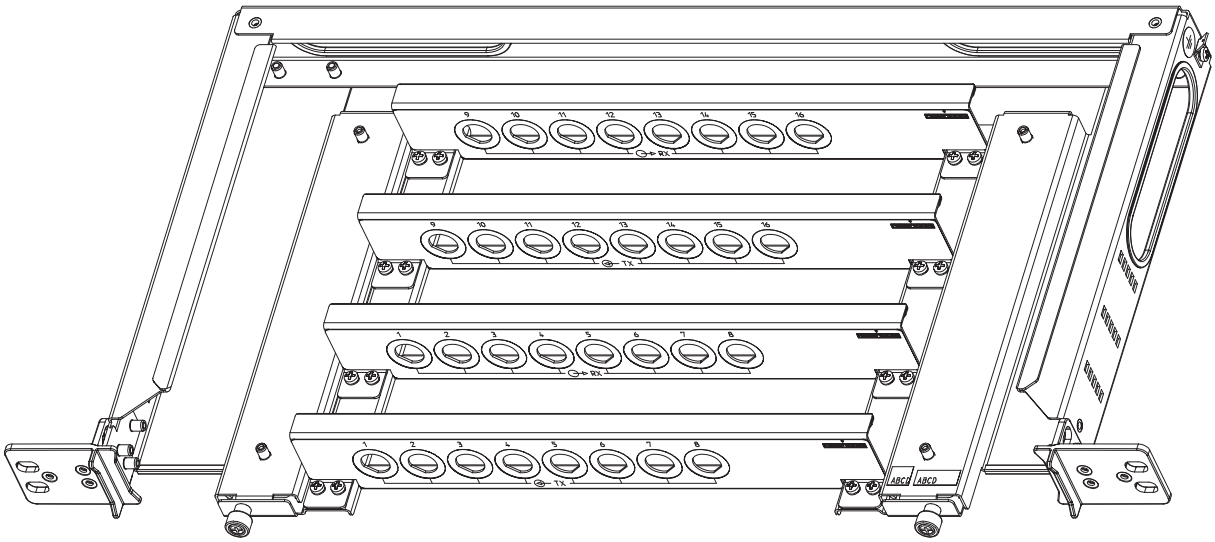

Assembly P/N: REF.**[6]** in Tab. 14. on page 60.

Fig. 41. Assembly view of DISTRIBUTOR SUBRACK FOR BNC

All rights reserved. Passing on and copying of this document, use and communication of its contents not permitted without written authorization from Alcatel.

All rights reserved. Passing on and copying of this document, use and communication of its contents not permitted without written authorization from Alcatel.

2–6 ODU AND RELATED OPTIONAL TOOLS OPERATIVE INFORMATION

This chapter gives operative information, for installation, commissioning and maintenance purposes regarding:

– ODU, herebelow
– PSK on page 117
– Rx power monitoring cable on page 120

2–6.1 ODU operative information

Refer to:

– para. 1–1.5.2 on page 29 for a **brief functional description** of ODU.

– chapter 2–3 on page 71 for composition and **P/Ns**

Fig. 42. on page 116 shows ODU views and access points.

The external interfaces are listed in Tab. 49. below, with the corresponding connector.

Tab. 49. ODU external interfaces

Ref. in Fig. 42.	Interface	Connector	Further information
(1)	RF interface for connection of antenna or coupler	waveguide	Tab. 50. herebelow
(2)	Connector for IDU/ODU cable	male N 50 ohm	
(3)	Connector for Portable Service Kit or Rx power monitoring cable	12–pin LEMO	para.2–6.2 on page 117 and para.2–6.3 on page 120

Tab. 50. RF interface

FREQUENCY GHz ⇒	**11**	**13–15**	**18–25**	**28–38**
Waveguide type ⇒	WR90	WR62	WR42	WR28
N.B. for further information, refer to para.2–3.5 on page 78				

N.B. No hardware presettings are envisaged on ODU.

N.B. For detailed operative information regarding:

– equipment installation and commissioning, please refer to:
  - 9400AWY Installation Handbook REF.[B] on page 244
  - 9400AWY Line–up Guide REF.[C] on page 244

– equipment maintenance, please refer to section 3 – MAINTENANCE on page 129 of this handbook.

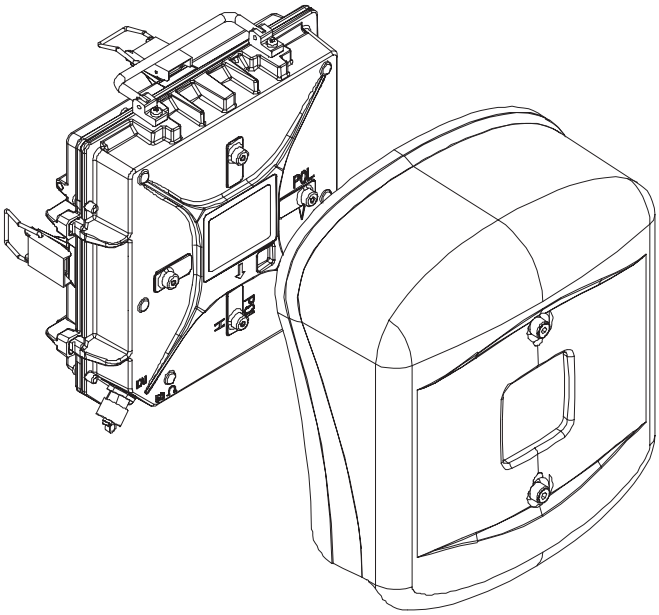

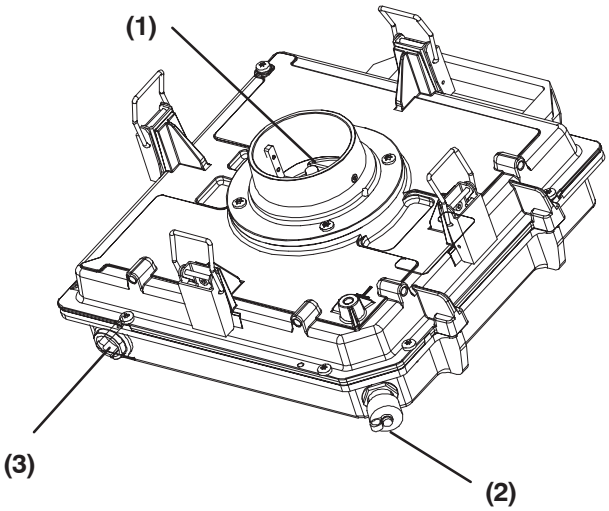

(1) RF interface for connection of antenna or coupler

(2) Connector for IDU/ODU cable

(3) Connector for PSK

Fig. 42. ODU views

All rights reserved. Passing on and copying of this document, use and communication of its contents not permitted without written authorization from Alcatel.

All rights reserved. Passing on and copying of this document, use and communication of its contents not permitted without written authorization from Alcatel.

2–6.2 PSK operative information

2–6.2.1 PSK assembly description

The Portable Service Kit PSK (P/N REF.[1] in Tab. 34. on page 85) allows to:
- carry out EOW in/out calls at ODU side, as described in chapter 3–2 on page 133.
- perform some checks on ODU equipment, as described in para.2–6.2.3 on page 119.

As shown in Fig. 51. herebelow, it is composed by a:
- a handset **(A)**
- a cable with its LEMO connector **(B)**, to be plugged into LEMO connector on ODU (see Fig. 42. on page 116) directly, or indirectly plugging it into **Rx power monitoring cable's connector (B)**, see Fig. 45. on page 120
- the headset **(C)** to be used for EOW in/out calls at ODU side.

the PSK headset (C) cannot be used in IDU

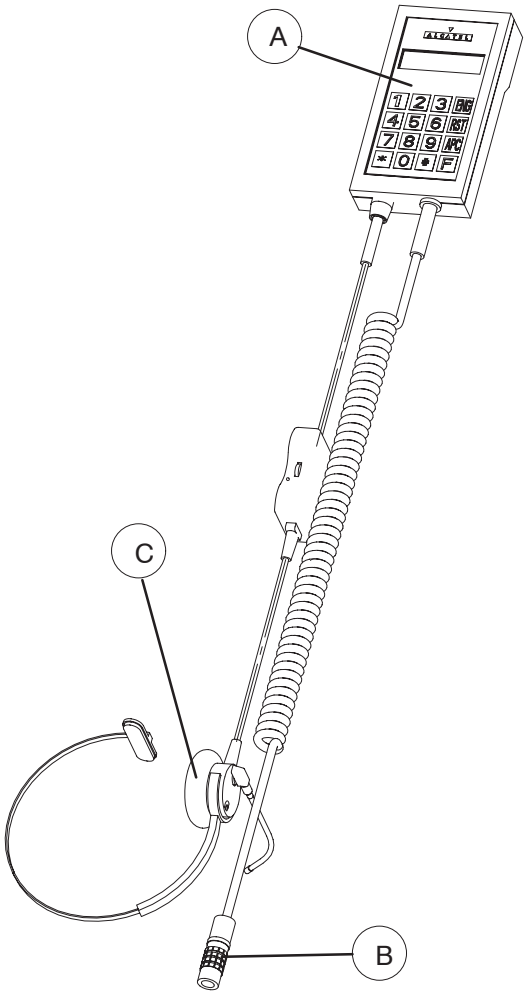

Fig. 43. Portable service kit (PSK) assembly view

2–6.2.2 PSK handset description

As shown in Fig. 44. herebelow, the Portable Service Kit handset consists of:

- 2 line Display
- UART Interface (RS232)
- Keyboard
- Telephone interface
- ODU interface connector

The Portable Service Kit unit functions are:

- PTx/PRx tests
- APC, set max PTx (ATPC–off)
- RST, alarm reset
- ENG, turn on EOW line
- Communication between local IDU and remote IDU/ODU as explained in chapter 3–2 on page 133.

The ECT displays a manual operation alarm when the Portable Service Kit is connected.

The ECT displays an alarm state of the ATPC function if the switch “ATPC Max” is in the ON position.

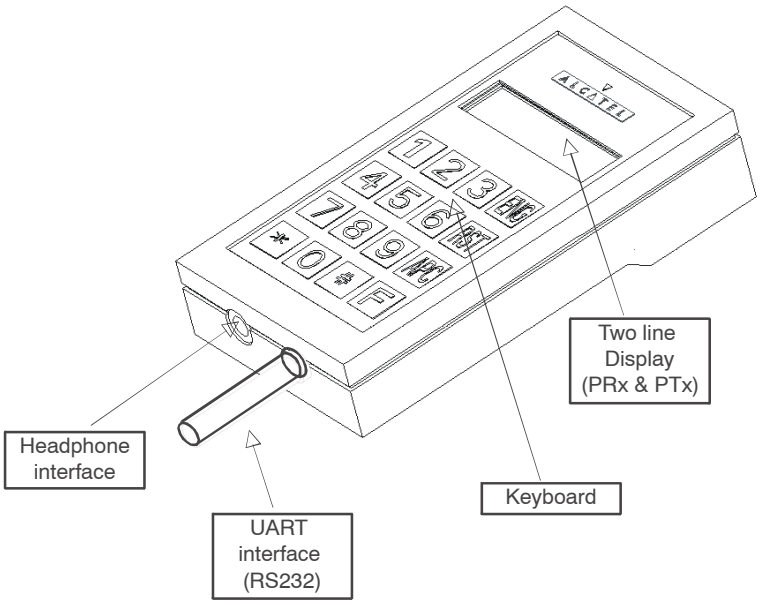

Fig. 44. Portable Service Kit handset

All rights reserved. Passing on and copying of this document, use and communication of its contents not permitted without written authorization from Alcatel.

All rights reserved. Passing on and copying of this document, use and communication of its contents not permitted without written authorization from Alcatel.

2–6.2.3 PSK instructions for tests/measurements

At power–up the PSK displays “HAND CONTROL V XXX” for 10 seconds, displays its telephone number (set in factory, see point **b)–PSK** on page 137 for details) for another 10 seconds, and then behaves as follows:

– displays the Tx and Rx power:

- PTx in dBm (digital format with 0.1 dB of definition)
- PRx in dBm (digital format with 1.0 dB of definition) and in analog format (dBm ±1.5dB)

as shown in following example:

```
TX 20.5dBm  RX–48dBm
RX ■■■■■■▌
```

The values are updated at a frequency of one second.

N.B. PSK PTx and PRx levels software readings has the same CT tolerance:
- PTx = Real Value ± 3dB
- PRx = Real Value ± 5dB

– Pushing APC button forces PTx nominal value. “F” character displays.

– Pushing the APC button again cancels the forcing condition.

– When faults are present on the RT unit the letter ε (epsilon) displays. Pushing the F button forces the PSK to display the revealed faults (two seconds each). The faults may be:
⇒ OUTPUT POWER LEVEL ALARM
⇒ LOW GAIN ALARM
⇒ FIRST CONVERSION LO UNLOCKED
⇒ RF LO UNLOCKED
⇒ UNLOCKED LOCAL LOOP
⇒ 6DB DECREASE LEVEL RF LO
⇒ TX LOSS CABLE ALARM
⇒ CARD FAIL RX
⇒ THRESHOLD RX ALARM
⇒ SPRI FRAME ALARM
⇒ HDB3 LEVEL ALARM

Following these, two line display of default transmitter and receiver power values appear.

WARNING:

– some error burst may be produced at the PSK insertion and disconnection

– the PSK insertion should be strictly limited to activation and maintenance activities: leaving it permanently connected may cause BER curve performance degradation.

For further information, please refer to:
– 9400AWY Installation Handbook REF.[B] on page 244
– 9400AWY Line–up Guide REF.[C] on page 244

2–6.3 Rx power monitoring cable operative information

Fig. 45. herebelow shows this optional cable (P/N REF.[2] in Tab. 34. on page 85):

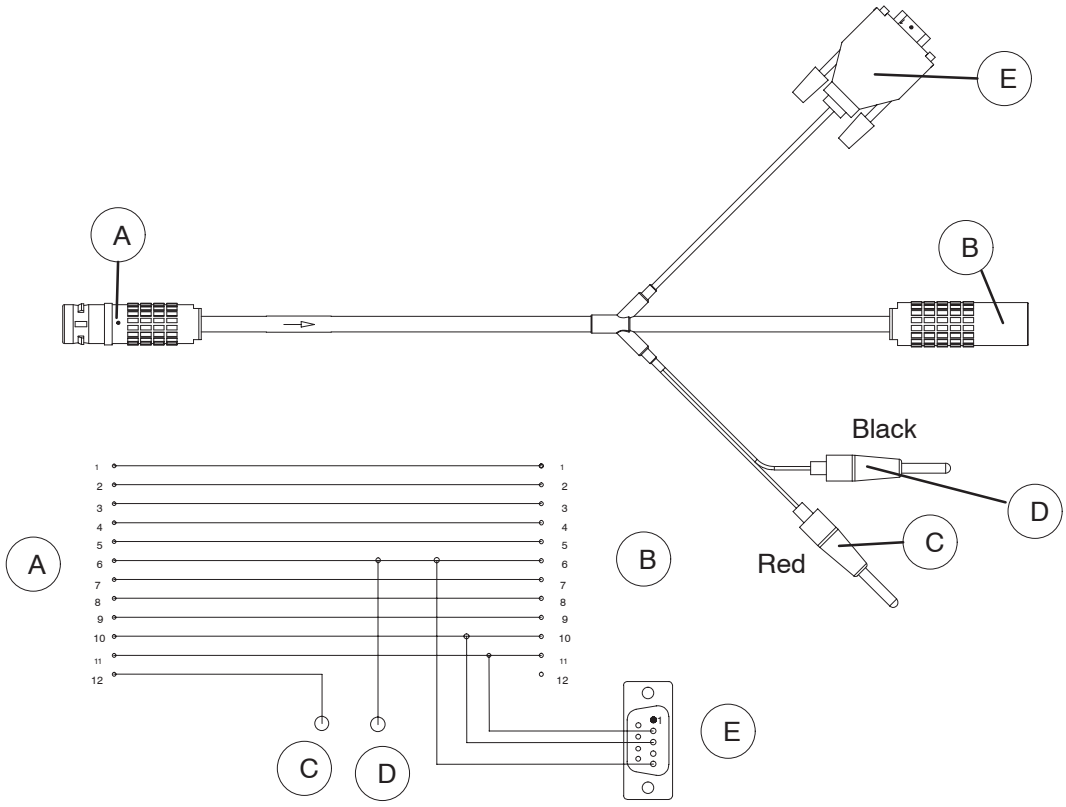

LEMO wire 6 = ground

Fig. 45. Rx power monitoring cable

Connector usage:

– **(A)** LEMO connector, to be plugged into LEMO connector on ODU (see Fig. 42. on page 116)

– **(B)** LEMO connector, to connect, if necessary, the **PSK's connector LEMO (B)** (see Fig. 43. on page 117)

– banana plugs **(C)** and **(D)** : output is a 0 to +3V dc voltage proportional to the radio Rx field. During equipment line–up, through a multi–meter it is possible to easily point the antenna until the measured voltage is the maximum, corresponding to the maximum radio Rx field. Actual Rx field value can be measured through PSK (see para.2–6.2.3 on page 119) or by means of the Craft Terminal (see CT Operator's Handbook).
For further information, please refer to the 9400AWY Line–up Guide REF.[C] on page 244

– **(E)** RS232 connector, for ALCATEL internal use only.

All rights reserved. Passing on and copying of this document, use and communication of its contents not permitted without written authorization from Alcatel.

All rights reserved. Passing on and copying of this document, use and communication of its contents not permitted without written authorization from Alcatel.

2–7 STATION LAYOUTS

This chapter describes the most common of all the available system configurations and layouts envisaged for the 9400AWY Rel.1.0 equipment version this handbook issue is relevant to.

Information given in the following is:

– **Constraints for 9400AWY–IDU multiple equipping in a rack** on page 122

– **Hardware setting** on page 122

– **Hardware installation** on page 122

– **Layouts and connections**:

- **9400AWY (1+0) compact** on page 123
- **9400AWY (1+0) Extendable to (1+1)** on page 124
- **9400AWY (1+1) HSB–SD or FD–DA AP/CP with two antennas** on page 125
- **9400AWY (1+1) HSB or FD–CP with one antenna** on page 126
- **9400AWY (1+1) FD–AP with one double polar external antenna** on page 127

Warning about interconnection cables drawn in Station Layout figures
They are drawn just to show the end–to–end points of each connection and must not be used for physically setting–up the connections, that must be done taking into account the need of extracting any board without removing cables not strictly relevant to it. Refer to Installation Handbook (Ref.[B] on page 244) for detailed installation information like cable P/Ns, connectors, cabling rules, etc.

Warning about equipment provisioning information
The items listed are the 'main' items. For complete installation purposes, other accessories, like mechanical components, adapters, etc. are necessary. Refer to Installation Handbook (Ref.[B] on page 244) for exhaustive information on such items and their use.

2–7.1 Constraints for 9400AWY–IDU multiple equipping in a rack

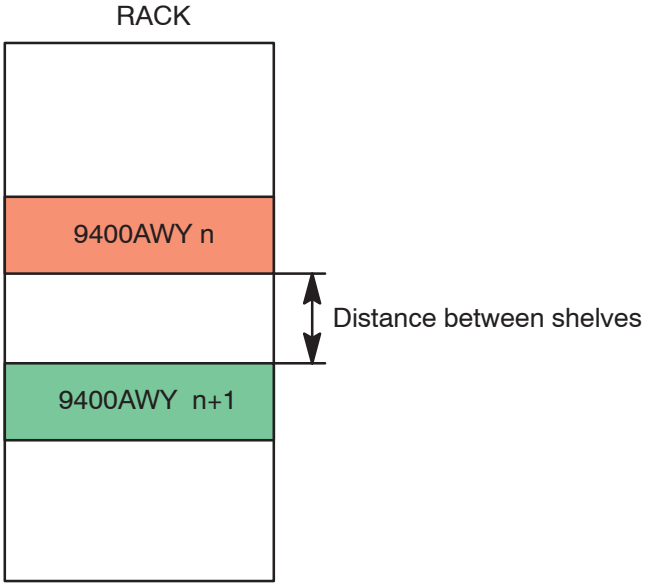

CONFIGURATION	DISTANCE (1 unit=44.45 mm)	
	MINIMUM This minimum value is mandatory to avoid overtemperature problems.	**SUGGESTED** This value avoids access difficulties in installation and maintenance activities.
9400AWY (1+0 / 1+0 EXP / 1+1) inclusive of optional distributor rack (see chapter 2–5 on page 113)	**1 unit** This value can create possible access difficulties in installation and maintenance activities.	**2 units**

For further details, please refer to the Installation Handbook (Ref.[B] on page 244).

2–7.2 Hardware setting

This equipment has no hardware setting options, with the exception of that envisaged for PSK phone number (refer to point **b)** on page 137).

2–7.3 Hardware installation

Please refer to the Installation Handbook (Ref.[B] on page 244) for detailed installation information like cable P/Ns, connectors, cabling rules, etc.

All rights reserved. Passing on and copying of this document, use and communication of its contents not permitted without written authorization from Alcatel.

All rights reserved. Passing on and copying of this document, use and communication of its contents not permitted without written authorization from Alcatel.

2–7.4 Layouts and connections

2–7.4.1 9400AWY (1+0) compact

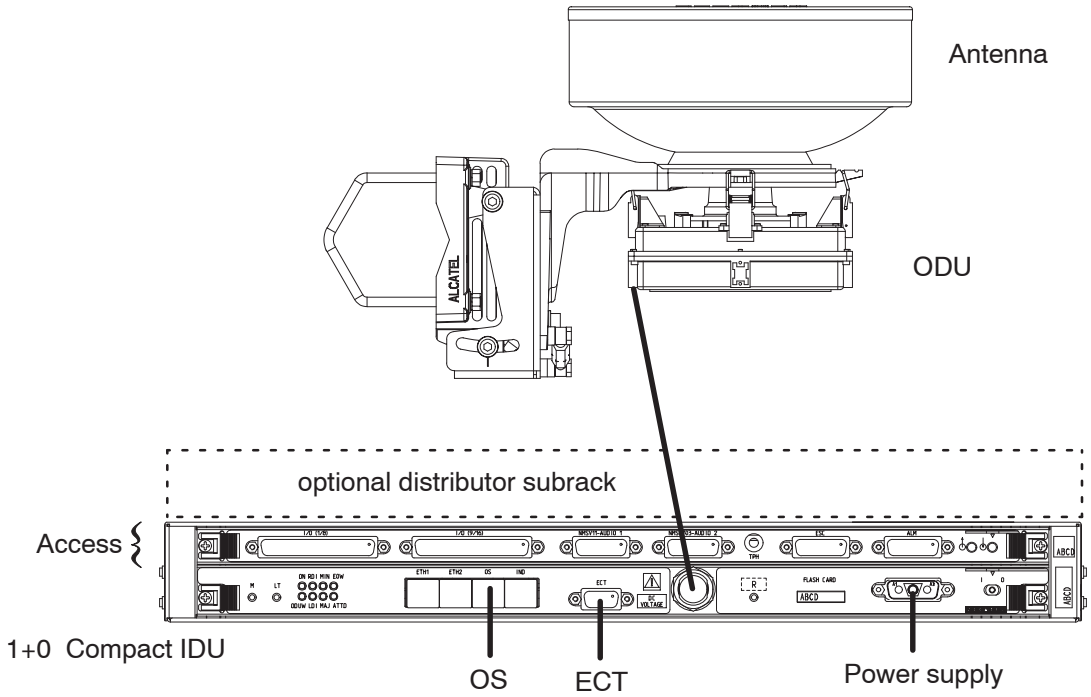

N.B. Figure shows the solution with integrated antenna; antenna can be also external (see point **e)** herebelow)

Fig. 46. Station layout of 9400AWY (1+0) compact

- **Access**: refer to Tab. 36. on page 90
- **Power supply**: see para.2–4.3.2.4 on page 105
- **OS**: see para.2–4.3.2.3 on page 104
- **ECT**: see para.2–4.3.2.2 on page 103
- **Equipment provisioning**:
  - **a)** 1+0 Compact IDU: see para.2–2.1 on page 64
  - **b)** Optional distributor subrack: see chapter 2–5 on page 113
  - **c)** IDU accessories and installation materials: refer to the Installation Handbook
  - **d)** ODU: see para.2–3.4 on page 73
  - **e)** Antenna: see paragraphs:
    - 2–3.5.1 on page 79 (1+0 configuration with integrated antenna)
    - 2–3.6 on page 83 (Integrated antenna part list)

      or
    - 2–3.5.3 on page 81 (Configuration with separated antenna)
  - **f)** Part list of ODU accessories and installation materials: see para.2–3.8 on page 85
- **Equipment block diagram**: see Fig. 8. on page 32

2–7.4.2 9400AWY (1+0) Extendable to (1+1)

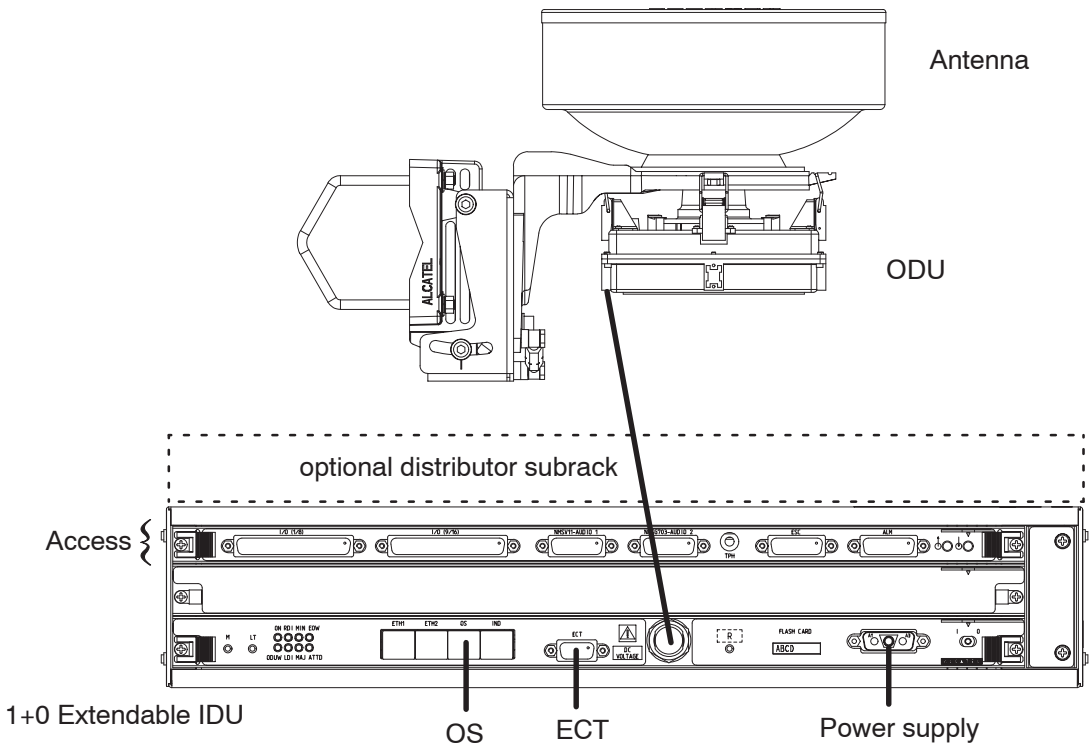

N.B. Figure shows the solution with integrated antenna; antenna can be also external (see point **e)** herebelow)

Fig. 47. Station layout of 9400AWY (1+0) Extendable to (1+1)

- **Access**: refer to Tab. 36. on page 90
- **Power supply**: see para.2–4.3.2.4 on page 105
- **OS**: see para.2–4.3.2.3 on page 104
- **ECT**: see para.2–4.3.2.2 on page 103
- **Equipment provisioning**:
  - **a)** 1+0 Extendable IDU: see para.2–2.2 on page 66
  - **b)** Optional distributor subrack: see chapter 2–5 on page 113
  - **c)** IDU accessories and installation materials: refer to the Installation Handbook
  - **d)** ODU: see para.2–3.4 on page 73
  - **e)** Antenna: see paragraphs:
    - 2–3.5.1 on page 79 (1+0 configuration with integrated antenna)
    - 2–3.6 on page 83 (Integrated antenna part list)

      or
    - 2–3.5.3 on page 81 (Configuration with separated antenna)
  - **f)** Part list of ODU accessories and installation materials: see para.2–3.8 on page 85
- **Equipment block diagram**: see Fig. 9. on page 33

All rights reserved. Passing on and copying of this document, use and communication of its contents not permitted without written authorization from Alcatel.

All rights reserved. Passing on and copying of this document, use and communication of its contents not permitted without written authorization from Alcatel.

2–7.4.3 9400AWY (1+1) HSB–SD or FD–DA AP/CP with two antennas

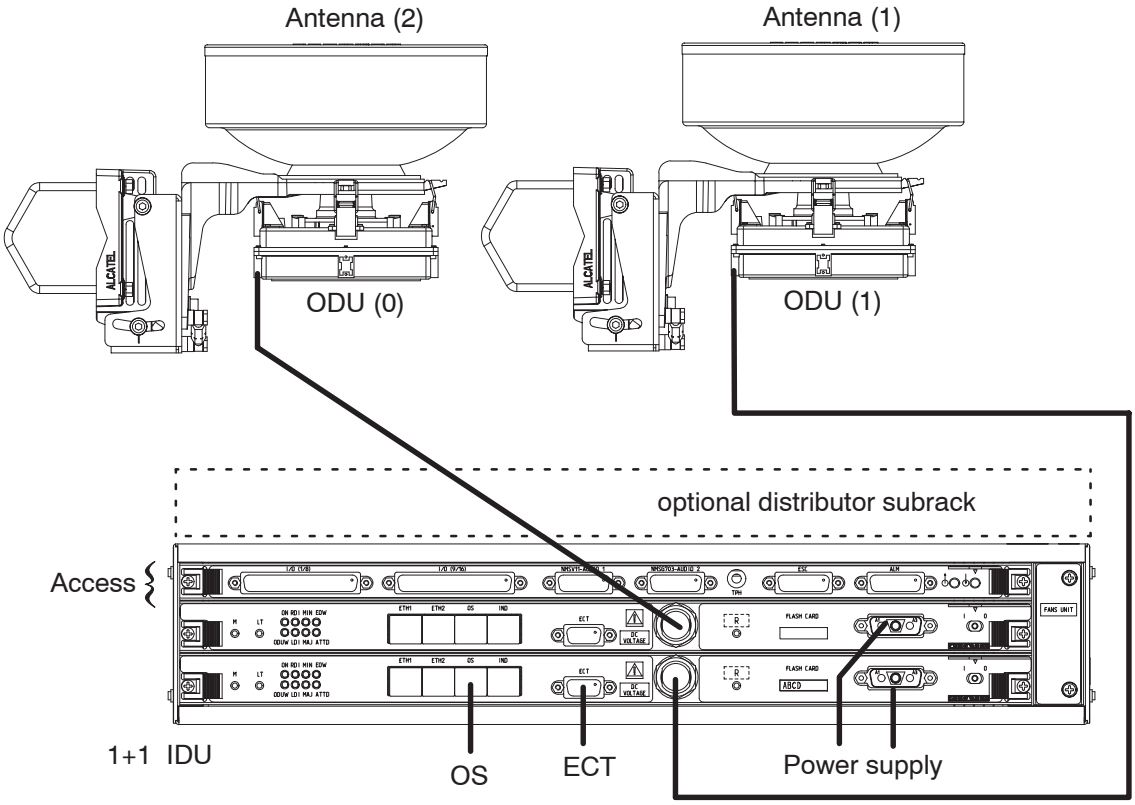

N.B. Figure shows the solution with integrated antennas; antennas can be also external (see point **e)** herebelow)

Fig. 48. Station layout of 9400AWY (1+1) HSB–SD or FD–DA AP/CP with two antennas

– **Access**: refer to Tab. 36. on page 90

– **Power supply** (2 connections): see para.2–4.3.2.4 on page 105

– **OS**: see para.2–4.3.2.3 on page 104

– **ECT**: see para.2–4.3.2.2 on page 103

– **Equipment provisioning**:

  a) 1+1 IDU: see para.2–2.3 on page 68

  b) Optional distributor subrack: see chapter 2–5 on page 113

  c) IDU accessories and installation materials: refer to the Installation Handbook

  d) ODU (x2): see para.2–3.4 on page 73

  e) Antenna (x2): see paragraphs:

    – 2–3.5.1 on page 79 (1+0 configuration with integrated antenna)
    – 2–3.6 on page 83 (Integrated antenna part list)
    or
    – 2–3.5.3 on page 81 (Configuration with separated antenna)

  f) Part list of ODU accessories and installation materials (x2): see para.2–3.8 on page 85

– **Equipment block diagram**: see:
  - Fig. 10. on page 34 (1+1 HSB–SD)
  - Fig. 12. on page 36 (1+1 FD–DA AP/CP)

2–7.4.4 9400AWY (1+1) HSB or FD–CP with one antenna

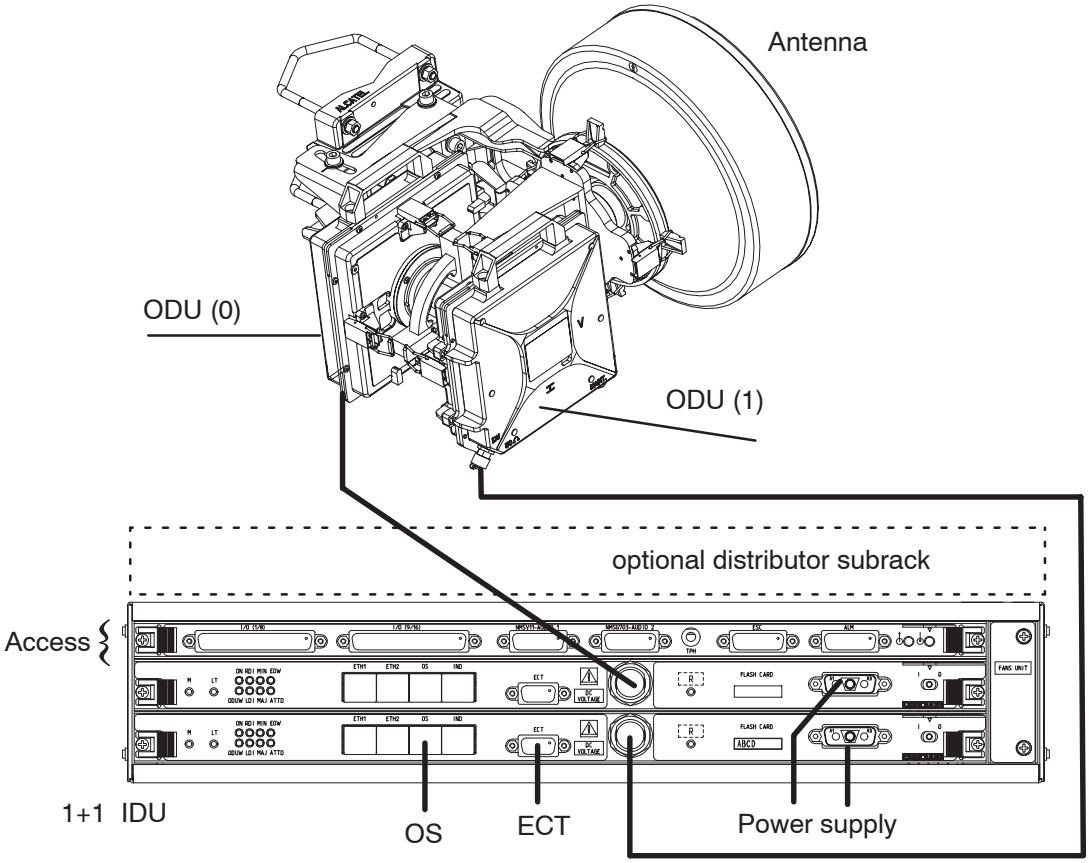

Fig. 49. Station layout of 9400AWY (1+1) HSB or FD–CP with one antenna

- **Access**: refer to Tab. 36. on page 90
- **Power supply** (2 connections): see para.2–4.3.2.4 on page 105
- **OS**: see para.2–4.3.2.3 on page 104
- **ECT**: see para.2–4.3.2.2 on page 103
- **Equipment provisioning**:
  - **a)** 1+1 IDU: see para.2–2.3 on page 68
  - **b)** Optional distributor subrack: see chapter 2–5 on page 113
  - **c)** IDU accessories and installation materials: refer to the Installation Handbook
  - **d)** ODU (x2): see para.2–3.4 on page 73
  - **e)** Antenna: see paragraphs:
    - 2–3.5.2 on page 80 (1+1 HSB configuration)
    - 2–3.6 on page 83 (Integrated antenna part list)
    - 2–3.7 on page 84 (Coupler part list)
  - **f)** Part list of ODU accessories and installation materials: see para.2–3.8 on page 85
- **Equipment block diagram**: see:
  - Fig. 11. on page 35 (1+1 HSB)
  - Fig. 13. on page 37 (1+1 FD–CP)

All rights reserved. Passing on and copying of this document, use and communication of its contents not permitted without written authorization from Alcatel.

All rights reserved. Passing on and copying of this document, use and communication of its contents not permitted without written authorization from Alcatel.

2–7.4.5 9400AWY (1+1) FD–AP with one double polar external antenna

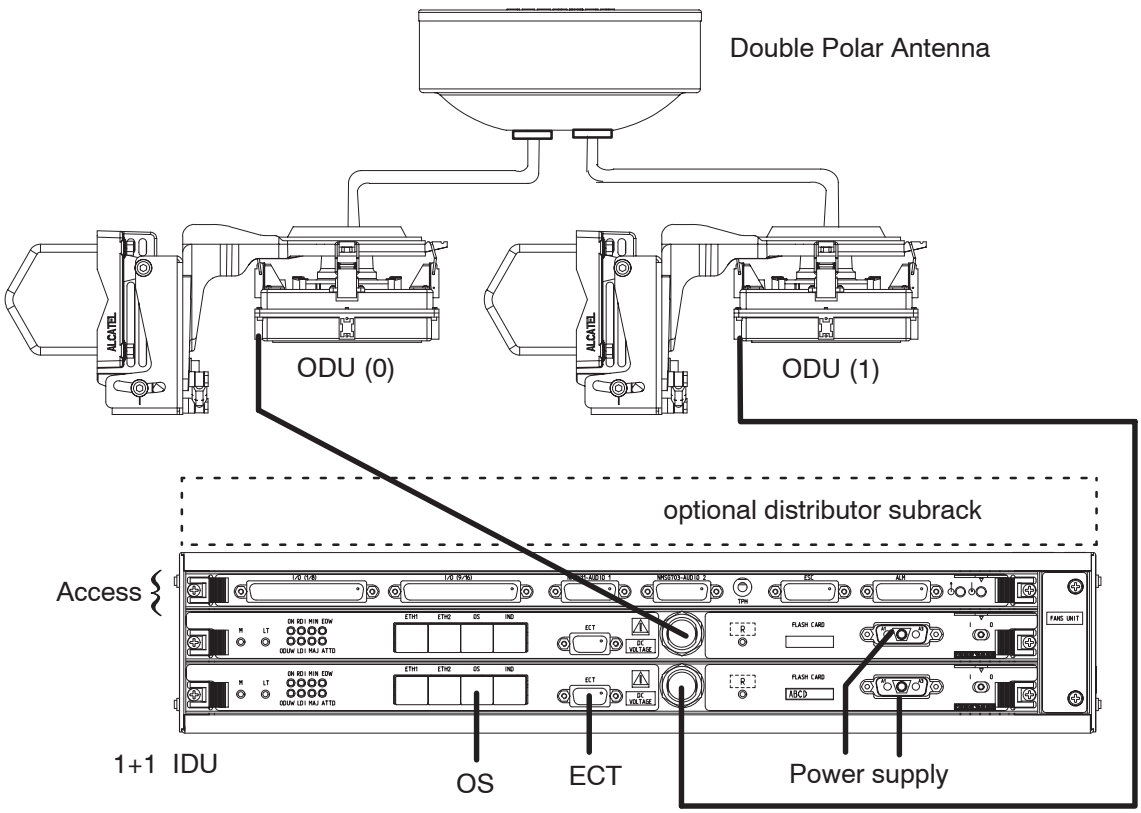

Fig. 50. Station layout of 9400AWY (1+1) FD–AP with one double polar external antenna

- **Access**: refer to Tab. 36. on page 90
- **Power supply** (2 connections): see para.2–4.3.2.4 on page 105
- **OS**: see para.2–4.3.2.3 on page 104
- **ECT**: see para.2–4.3.2.2 on page 103
- **Equipment provisioning**:
  - **a)** 1+1 IDU: see para.2–2.3 on page 68
  - **b)** Optional distributor subrack: see chapter 2–5 on page 113
  - **c)** IDU accessories and installation materials: refer to the Installation Handbook
  - **d)** ODU (x2): see para.2–3.4 on page 73
  - **e)** Connection of Double Polar External Antenna: see para.2–3.5.3 on page 81 (Configuration with separated antenna)
  - **f)** Part list of ODU accessories and installation materials: see para.2–3.8 on page 85
- **Equipment block diagram**: see Fig. 14. on page 38

All rights reserved. Passing on and copying of this document, use and communication of its contents not permitted without written authorization from Alcatel.

SECTION 3: MAINTENANCE

It contains the whole logical and operative information for the equipment maintenance.

SECTION CONTENT	PAGE
Chapter 3–1 – Maintenance Policy It introduces the basic concepts for the equipment maintenance.	131
Chapter 3–2 – Set and use of EOW functions It explains how to configure and use the Engineering Order–Wire functions of the equipment.	133
Chapter 3–3 – Maintenance Tools and Spare Parts It describes the instruments, accessories and the equipment spare parts that are envisaged to carry out the routine and corrective maintenance of the equipment.	141
Chapter 3–4 – First Level Maintenance It describes the First Level Maintenance (system state display) of the equipment.	147
Chapter 3–5 – Second Level Maintenance It describes the preventive and corrective maintenance of the equipment.	151

All rights reserved. Passing on and copying of this document, use and communication of its contents not permitted without written authorization from Alcatel.

All rights reserved. Passing on and copying of this document, use and communication of its contents not permitted without written authorization from Alcatel.

All rights reserved. Passing on and copying of this document, use and communication of its contents not permitted without written authorization from Alcatel.

3–1 MAINTENANCE POLICY

This chapter introduces the basic concepts for the equipment maintenance.

3–1.1 Classification of maintenance levels and operators

The maintenance procedures described in the following chapters are based on the following considerations:

– The possibility of carrying out routine and corrective maintenance is based on the availability of:
  - a suitable set of instruments and accessories
  - a suitable set of spare parts

  These matters are described in chapter 3–3 on page 141.

– Maintenance can be classified as:

  - **First Level Maintenance**:

    – ROUTINE (system state check)

  - **Second Level Maintenance**:

    – PREVENTIVE (periodic set of measurements and checks)
    – CORRECTIVE (troubleshooting and repair)

  First level maintenance consists of a set of simple operations by means of which a First Level Maintenance Operator can acknowledge the state of the system and decide whether or not the intervention of a Second Level Maintenance Operator is required in order to bring back the assembly to optimum operating conditions by troubleshooting and unit replacement, if necessary. In this philosophy:

  - **First Level Maintenance Operator** should not be authorized to change the equipment status; he should be only authorized to display it or to make some simple tests through the Craft Terminal, if expressly authorized by the Station Manager.

    These actions are described in chapter 3–4 on page 147.

  - **Second Level Maintenance Operator** is authorized to make all actions necessary to repair the system; moreover he should only be authorized to carry out routine maintenance.

    These actions are described in chapter 3–5 on page 151.

– The two–station layout typical of a radio link requires often that different operators can communicate with each other to solve problems. The EOW functions of this equipment give a simple way for this communication need.

  This matter is described in chapter 3–2 on page 133.

3–1.2 First Level Maintenance Personnel skill

First Level Maintenance Personnel must have received:

- an adequate technical background on telecommunications. Experience in first level maintenance activities is a must;
- an adequate presentation on the equipment this handbook refers to;
- detailed instructions on “what to do” and/or “who must be contacted” in the case should he find the equipment not in its normal conditions.

3–1.3 Second Level Maintenance Personnel skill

Second Level Maintenance Personnel must have received an adequate technical background on telecommunications. Experience in maintenance activities is a must.

In particular, Second Level Maintenance Personnel must be familiar:

- with the equipment this handbook refers to
- and with the use of the Craft Terminal applications of the equipment this handbook refers to.

Without these prerequisites, reading this handbook and the associated handbooks indicated in para.B.2.1 on page 243 is usually not enough to properly maintain equipment.

All rights reserved. Passing on and copying of this document, use and communication of its contents not permitted without written authorization from Alcatel.

3–2 USE OF EOW FUNCTIONS

Please refer to chapter 3–1 on page 131 for an introduction to the basic concepts of equipment maintenance.

This chapter explains how to configure and use the EOW (Engineering Order–Wire) function of the equipment.

Information given in the following is:

– **Telephone kit and telephone set description** on page 134

– **Setting information** on page 136

– **Call Set–up/End by Telephone Set connected on the Access unit** on page 139

– **Call Set–up/End by the PSK connected to the ODU** on page 139

All rights reserved. Passing on and copying of this document, use and communication of its contents not permitted without written authorization from Alcatel.

3–2.1 Telephone kit and telephone set description

The DTMF telephone kit (P/N REF.[18] in Tab. 14. on page 60) allows to carry out EOW in/out calls at IDU side. As shown in Fig. 51. herebelow, it is composed by a Telephone set (A) and its holder (B) to be mounted, through the accessories depicted in the figure, on the rack.

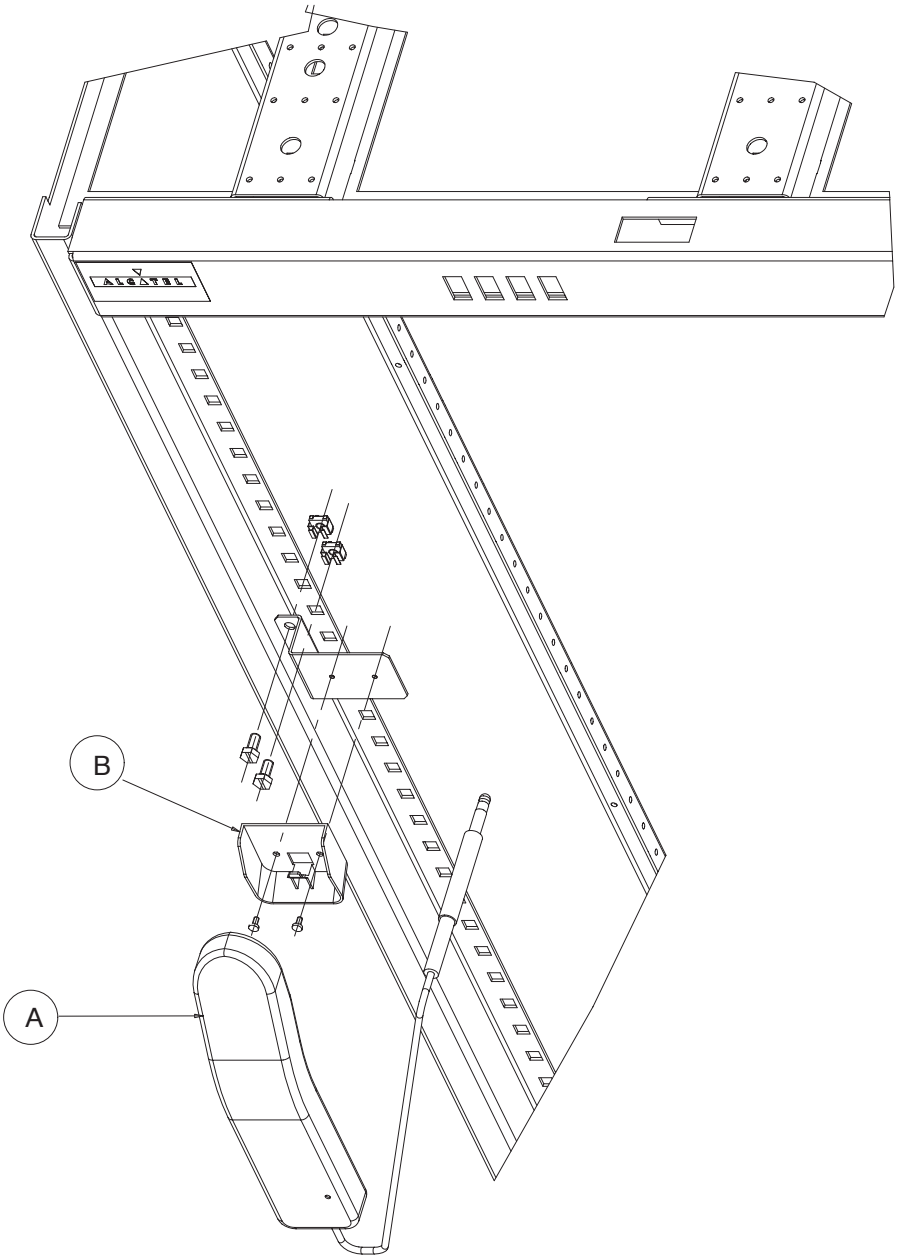

Fig. 51. DTMF Telephone kit assembly

All rights reserved. Passing on and copying of this document, use and communication of its contents not permitted without written authorization from Alcatel.

All rights reserved. Passing on and copying of this document, use and communication of its contents not permitted without written authorization from Alcatel.

Fig. 52. herebelow shows one of the possible versions of supplied Telephone sets.

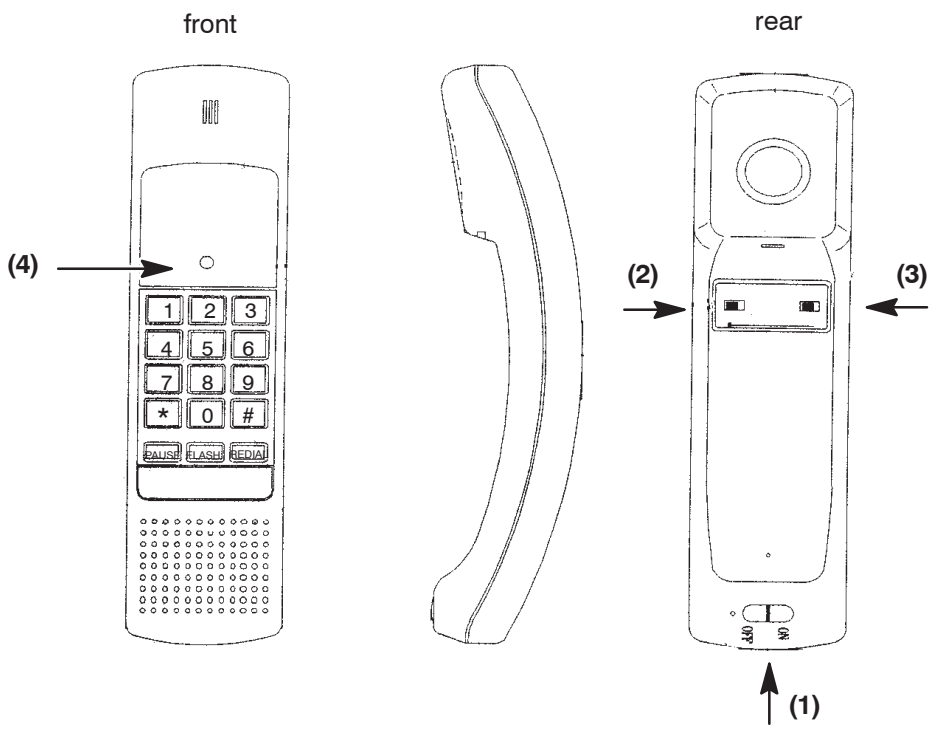

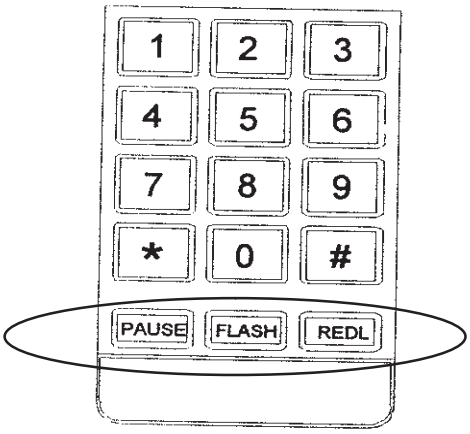

if present, these keys have no use

(1) ON/OFF switch (must be set to ON when the Telephone is used)

(2) PULSE/TONE switch (must be set to TONE)

(3) DIAL/LOCK switch (must be set to DIAL when the Telephone is used)

(4) Led (lights on when the Telephone set jack is connected to TPH connector on the Access unit and switch **(1)** is set to ON)

Fig. 52. Telephone set

3–2.2 Setting information

N.B. for PSK general description, please refer to para.2–6.2 on page 117.

a) Connection diagram

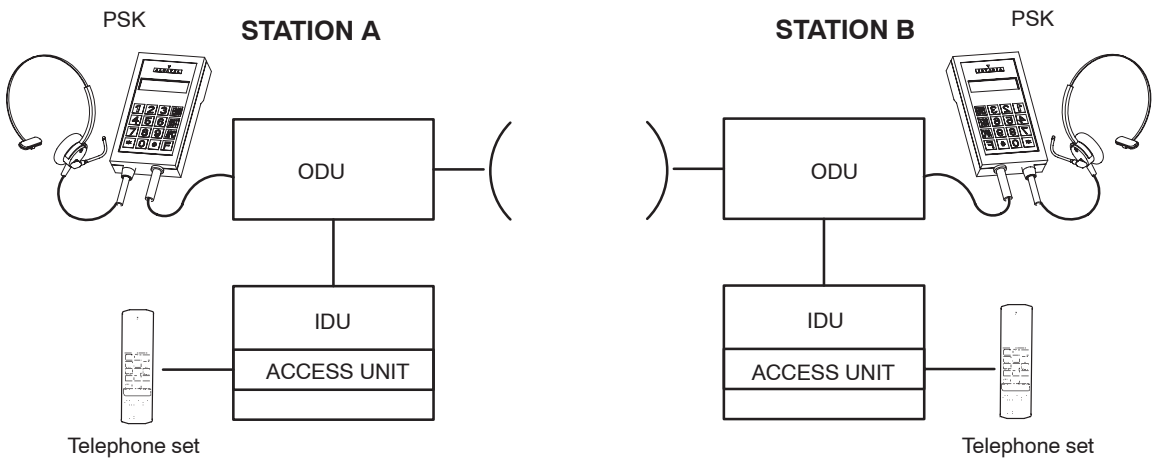

N.B. each Telephone set and each PSK has its own phone number. Phone number can be in the 10 to 99 range. Telephone sets and PSKs must have different phone numbers. PSK's headset cannot be used in IDU.

Physical connections:

- on ODU:
  - connect PSK headset jack to PSK suitable connector. See Fig. 43. on page 117.
  - connect PSK cable to LEMO Connector on ODU (no need to open the external cabinet) See Fig. 42. on page 116.
- on IDU, connect Telephone set jack to TPH connector on the Access unit. See Fig. 26. on page 90.

All rights reserved. Passing on and copying of this document, use and communication of its contents not permitted without written authorization from Alcatel.

All rights reserved. Passing on and copying of this document, use and communication of its contents not permitted without written authorization from Alcatel.

b) Phone number display/change

- **PSK**

  PSK phone number is displayed on PSK display when PSK is connected to ODU.

  PSK phone number can be changed by the following operations:

  1) Plug in the PSK into the ODU

  2) Push the # Button on the PSK Keyboard, onto the display will appear:

  – Digit The New Number –

  3) Digit onto the PSK keyboard the new telephone number (**TWO DIGITS**).

  4) Onto the display will appear : **– THE NEW NUMBER IS – XX –**

  5) If the operation has taken too long or performed in a wrong way , onto the display will appear:

  – TIME EXPIRED – (in this case, the number has not been changed).

- **Telephone set**
  Display/setting is done through the Craft Terminal with the following menus:

  – display: Configuration ⇒ System Settings ⇒ Overhead ⇒ Phone Parameter
  – change: Configuration ⇒ System Settings ⇒ Overhead ⇒ Phone Parameter ⇒ 'phone number' ⇒ Apply

  Refer to CT Operator's Handbook for details.

c) Telephone set settings (on rear side)

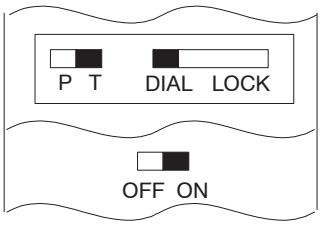

P = Pulse, T = Tone.
Set to T prior to making a call.

Set DIAL–LOCK switch to LOCK,
and OFF–ON switch to ON
prior to making a call.

d) Ways of Calling : two different ways of calling are possible:

- SELECTIVE: a connection between two users (dial a number: 10 to 99)
- OMNIBUS: a unidirectional connection with all the users (dial digits 00)

e) LEDs indication:

- EOW (GREEN): free line
- EOW (YELLOW): busy line
- Flashing YELLOW: received and recognized call

N.B. position of green and yellow LEDs on PSK and MAIN unit:

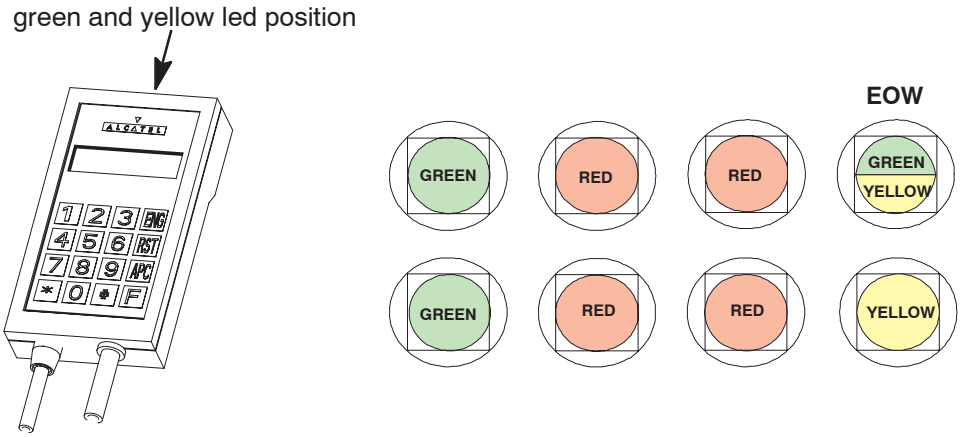

f) PSK and Telephone set keyboard

HANDSET	PSK	MEANING
*	RST	Force unlocking of the line
#	ENG	Engage line

All rights reserved. Passing on and copying of this document, use and communication of its contents not permitted without written authorization from Alcatel.

All rights reserved. Passing on and copying of this document, use and communication of its contents not permitted without written authorization from Alcatel.

3–2.3 Call Set–up/End by Telephone Set connected on the Access unit

a) To Call from Handset:

1) Check that line is free (EOW–free green LED on the MAIN unit is on).
2) Handset OFF/ON switch to ON.
3) On keypad, press # to engage line.
4) Check that EOW–busy yellow LED on the MAIN unit is on.
5) On keypad, dial two–digit number of station to be called (or 00 for omnibus call)

b) To Answer Call at Handset:

1) EOW–busy yellow LED on the MAIN unit flashes and audible tone is present.
2) Connect handset to IDU, set ON/OFF switch to ON, press # on keypad.

c) To End Call from Handset:

1) On keypad, press *.
2) Move ON/OFF switch to OFF.

3–2.4 Call Set–up/End by the PSK connected to the ODU

WARNING:

– some error burst may be produced at the PSK insertion and disconnection
– the PSK insertion should be strictly limited to activation and maintenance activities: leaving it permanently connected may cause BER curve performance degradation.

a) To Call From PSK:

1) Check that PSK is connected to ODU and PSK green LED is on.
2) Connect headset to PSK.

N.B. When headset is connected to PSK, a tone is present. Connector plug acts as an ON/OFF switch.

3) On PSK keypad press ENG
4) On PSK check that yellow LED is on
5) Dial number of station to be called

b) To Answer Call at PSK:

1) PSK flashing yellow LED indicates incoming call
2) Connect headset to PSK; audio should be present

N.B. If headset was already connected to PSK, press ENG key on keypad to stop ring.

c) To End Call at PSK:

1) On PSK keypad press RST key
2) PSK green LED comes on and yellow LED goes off

All rights reserved. Passing on and copying of this document, use and communication of its contents not permitted without written authorization from Alcatel.

1AA 00014 0004 (9007) A4 – ALICE 04.10

All rights reserved. Passing on and copying of this document, use and communication of its contents not permitted without written authorization from Alcatel.

3–3 MAINTENANCE TOOLS AND SPARE PARTS

3–3.1 Introduction

Please refer to chapter 3–1 on page 131 for an introduction to the basic concepts of equipment maintenance.

This chapter describes the instruments, accessories and the equipment spare parts that are envisaged to carry out the routine and corrective maintenance of the equipment, and and is organized as follows:

– **Instruments and accessories** herebelow, including:
  - **Software tools** on page 141
  - **Maintenance Tool Kit** on page 141

– **Set of spare parts** on page 144, including:
  - **Types of Spare Parts** on page 144
  - **Number of Spare Parts** on page 145
  - **General rules on spare parts management** on page 145
  - **Spare Flash Card management** on page 145

3–3.2 Instruments and accessories

3–3.2.1 Software tools

There is a local Craft Terminal (PC) which permits to display all the alarms and which manages the Equipment. Its implementation is described in the Craft Terminal Operator's Handbook relevant to the SWP used (see Tab. 67. on page 244).

When a TMN is implemented, an Operation System will display alarms and manage all the connected Equipment of the network. Refer to the relevant handbooks.

With reference to Fig. 31. on page 101:

– connection with the PC is achieved through connector **(8)** available on the MAIN unit;

– through connector **(6)** the same unit can be connected to an Operation System associated to the Transmission Management Network in order to execute operations similar to those carried out by the PC.

3–3.2.2 Maintenance Tool Kit

For Maintenance Tool Kit P/N please see REF.[19] in Tab. 14. on page 60.
Tab. 51. on page 142 lists the items contained in the Maintenance Tool Kit. Drawings and descriptions are given for special items.

Tab. 51. Maintenance Tool Kit

ITEMS	FACTORY P/N	NOTES
BAGS		
Tool bag	810.704.305	
Maintenance Tool bag	870.704.306	
STANDARD TOOLS & MISCELLANEOUS		
Fixed spanner 8 x 10	870.952.110	
Fixed spanner 16 x 17	870.952.129	
Fixed spanner 17 x 19	870.952.131	
Screwdriver 3 x 100	870.959.130	
Screwdriver 3.5 x 100	870.959.140	
Screwdriver 5.5 x 200	870.959.166	
Crosshead Screwdriver 3 x 60	870.959.530	
Crosshead Screwdriver 4.5 x 80	870.959.540	
Crosshead Screwdriver 4.5 x 250	870.959.565	
Polygon spanner 17	870.952.417	
Polygon tube spanner 5	870.952.705	
Polygon tube spanner 6	870.952.706	
Torque wrench	870.952.302	
Special fixed spanner 5.5 mm	879.010.249	
Special fixed spanner 7 mm	879.010.250	
COMPONENTS OF ANTISTATIC WRIST–BAND		
Antistatic wrist–band	041.172.011	see para.A.5 on page 231
Antistatic applications cord	041.911.001	
Plug with crocodile pliers	041.172.010	
Female button termination	248.501.099	
SPECIAL EXTRACTORS		
Cables 1.0/2.3 extractor	245.701.842	see Fig. 53. on page 143
SPECIAL CABLES		
Cord for use with SIBDL	041.992.617	see Fig. 54. on page 143

All rights reserved. Passing on and copying of this document, use and communication of its contents not permitted without written authorization from Alcatel.

All rights reserved. Passing on and copying of this document, use and communication of its contents not permitted without written authorization from Alcatel.

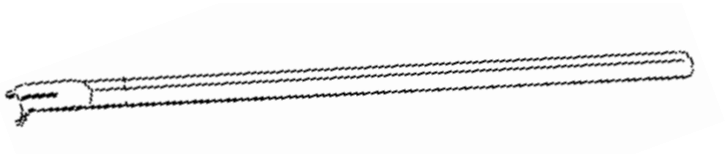

Fig. 53. Cables 1.0/2.3 extractor

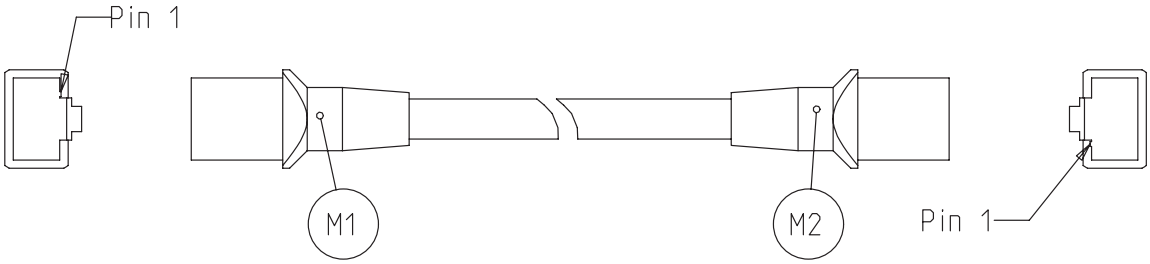

Connection table						
Pair	Wire A	M1 Pin N°	M2 Pin N°	Wire B	Pin N°	Pin N°
1	White / Blue ring	1	3	Blue	2	6
2	White / Orange ring	3	1	Orange	6	2
3	White / Green ring	4	4	Green	5	5
4	White / Brown ring	7	7	Brown	8	8

For the use, refer to the Line–Up Guide

Fig. 54. Cord for use with SIBDL

3–3.3 Set of spare parts

3–3.3.1 Types of Spare Parts

3–3.3.1.1 ODU Spare Parts

As spare part is provided the complete ODU. For the P/Ns refer to para. 2–3.4 on page 73.

3–3.3.1.2 IDU Spare Parts

The set of spare parts for the IDU is inclusive of a minimum number of spares for each type of replaceable plug–in units.
The suggested spare parts should be at least those containing electronic parts, as detailed in following Tab. 52. on page 144.

N.B. The unit replacement procedures described in paragraph **Corrective Maintenance** in this section presume that the units present in the spare–part stock correspond exactly to the plug–in replaceable units that are equipped in the system (i.e. with the same Part Number):

Tab. 52. IDU spare parts list

A all configurations
B 1+0 compact configurations only
C 1+0 extendable configurations only
D 1+1 configurations only

Item	Item drawing	P/N (REF. IN Tab. 14. page 60)	A	B	C	D
MAIN IDU unit	Fig. 30. on page 100	[8]	X			
FLASH CARD (**N.B.**)	Fig. 33. on page 106	[13] ... ...[17]	X			
ACCESS unit	Fig. 25. on page 89	[7]	X			
1+0 IDU subrack	Fig. 15. on page 64	[1]		X		
1+1 IDU subrack	Fig. 17. on page 68	[2]			X	X
EXTENSION IDU unit	Fig. 34. on page 109	[9]				X
FANS unit	Fig. 17. on page 68	[10]				X

N.B. see para.3–3.3.4 page 145.

---

1. according to the spare–parts policy, Customers are supplied with spare units already equipped with front plates and baby boards, according to Customer's System configuration.

All rights reserved. Passing on and copying of this document, use and communication of its contents not permitted without written authorization from Alcatel.

All rights reserved. Passing on and copying of this document, use and communication of its contents not permitted without written authorization from Alcatel.

3–3.3.2 Number of spare parts

The overall number of spares depends on Customer requirements, and should be based on the average amount of transmission circuits available to be accounted for not only during MTBF but also during MTTR; the latter depending on the amount of spare parts available.

3–3.3.3 General rules on spare parts management

Before storing the spare units make sure that they are working by inserting them in an operating equipment.

It is suggested to periodically check those spare units that have not been utilized for over a year.

If the spare parts and the equipment are stored in the same environment, make sure that the spare parts are placed in cabinets to safeguard them from dust and damp.

Moreover, they should also be well grounded to avoid electrostatic discharges.

If the spare parts are stored in another room, or have to be moved from another place, building or site, make sure that the following is observed:

- the spare parts must be wrapped in anti–static and padded envelopes;
- the spare parts must not touch wet surfaces or chemical agents that might damage them (e.g. gas);
- if during transportation the temperature is lower than that of the room where they had been kept, make sure that before using them they pass a certain period in a climatic chamber to prevent thermal shocks and/or the possibility of steaming up.

Suggestion: before storing spare parts, hardware preset with the same configuration of the units in service.

3–3.3.4 Spare Flash Card management

The Flash Card supplied as spare part is empty (it includes the license type only) and must be left 'as it is' to be eventually used as spare part. To use the spare Flash Card, insert it in the MAIN unit and configure the NE again. For further information, please refer to para.2–4.4 on page 106.

ATTENTION

(caution to avoid equipment damage)

Do not use a Flash Card already loaded with SW as spare part.

You must be aware that if a Flash Card with a SWP (different from that running in the system) is inserted 'as it is' in the Main unit (and the Main unit is inserted in its shelf slot), the software download will be automatically carried out from the Flash Card toward the EC, thus causing a complete system crash.

All rights reserved. Passing on and copying of this document, use and communication of its contents not permitted without written authorization from Alcatel.

All rights reserved. Passing on and copying of this document, use and communication of its contents not permitted without written authorization from Alcatel.

3–4 FIRST LEVEL MAINTENANCE

3–4.1 Introduction

Please refer to chapter 3–1 on page 131 for an introduction to the basic concepts of equipment maintenance.

This chapter describes the First Level Maintenance of the equipment and is organized as follows:

– **System state display by visual indications** on page 147, including:
  - **LED test** on page 147
  - **Alarm LEDs on MAIN unit** on page 147
  - **Alarm LEDs on EXTENSION unit** on page 149

– **Craft Terminal interface common used commands** on page 150

3–4.2 System state display by visual indications

3–4.2.1 LED test

To be sure to have correct indications, carry out the LED test of Main IDU Unit, pushing pushbutton **(2)** in Fig. 55. on page 148: while pushed, all leds of all units should be turned on.

In 1+1 system, perform the same test also on the Extension IDU Unit, pushing pushbutton **(1)** in Fig. 56. on page 149: while pushed, all leds of all units should be turned on.

3–4.2.2 Alarm LEDs on the MAIN unit

All the alarms detected on the units are collected and processed by the MAIN unit in the IDU which gives centralized optical indications by means of LEDs on its front coverplate, as shown in Fig. 55. on page 148.

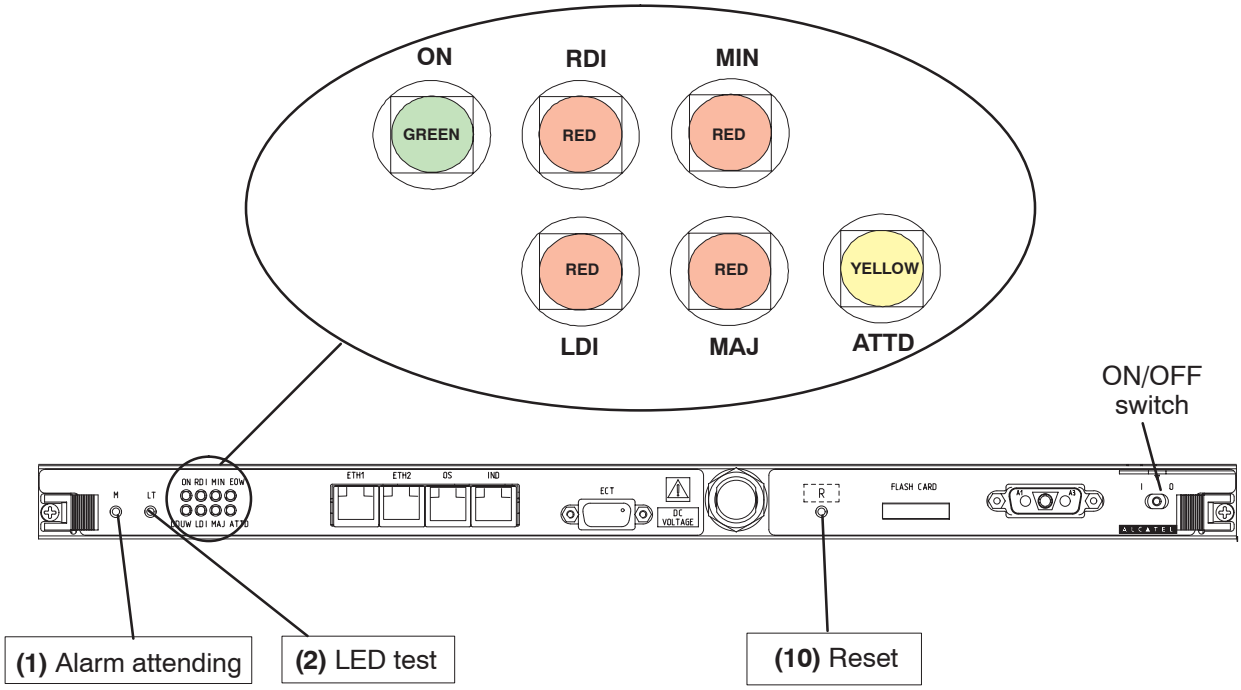

LED on	Meaning	Action
Green LED **ON**	If off (and if the ON/OFF switch is on) there is a problem in the station battery or in the MAIN unit	**A**
Red LED **LDI**	There is a failure in the equipment	**A**
Red LED **RDI**	There is a failure in the remote station	**A**
Red LED **MAJ**	Detection of an **URGENT** alarm: it means that there is at least one alarm (internal and/or external) for which traffic is affected.	**A**
Red LED **MIN**	Detection of a **NOT URGENT** alarm: it means that there is at least one alarm (internal and/or external) for which traffic is not affected (e.g. something is wrong, but the traffic is recovered by an automatic protection switch).	**B**
Yellow LED **ATTD**	Alarm condition **ATTENDED**: it means that an Operator (by pushbutton **(1)** or by Craft Terminal) has attended the alarm (for details, see para. 3–5.5.2.2 on page 158).	**B**

ACTION:

A The immediate intervention of a **Second Level Maintenance Operator** is required.

B The immediate intervention of a **Second Level Maintenance Operator** is not required

Fig. 55. LEDs and pushbutton on MAIN unit for maintenance purposes

All rights reserved. Passing on and copying of this document, use and communication of its contents not permitted without written authorization from Alcatel.

All rights reserved. Passing on and copying of this document, use and communication of its contents not permitted without written authorization from Alcatel.

3–4.2.3 Alarm LEDs on the Extension unit

Tab. 53. below indicates the normal condition (no alarm) of LEDs on the Extension unit.

Tab. 53. Normal condition (no alarm) of LEDs on the Extension unit

LED	Normal status
ON (green)	ON (if the ON/OFF switch is on)

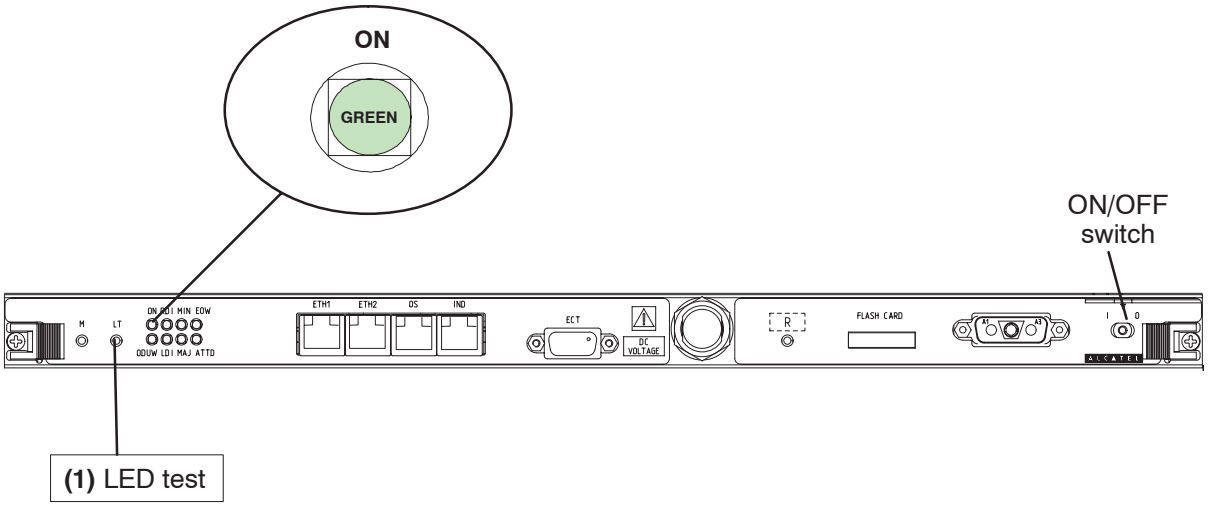

Fig. 56. LEDs and pushbutton on Extension unit for maintenance purposes

3–4.3 Craft Terminal interface commonly used commands

N.B. This operation can be done by the **First Level Maintenance Operator** only if expressly authorized by the Station Manager. For screen details, refer to the CT Operator's Handbook.

a) Craft Terminal (CT) connection and start–up

1) connect Craft Terminal (CT) to Equipment
plug the suitable cable to PC and to **CT** connector (8) on the MAIN unit (see Fig. 31. on page 101).

2) CT start
- power on CT and wait for PC start–up
- **Start** ⇒ **1320CT v.x.x.x** ; notes:
  - if choice **1320CT v.x.x.x** is not available, PC is not configured as Craft Terminal: Software Package loading is necessary
  - **x.x.x** depends on Software Package loaded

  after a while, the "Network Element Synthesis" screen will appear, showing all Network Elements that can be selected. After this Start operation, all NEs appear with symbol "**?**" (it means that they are not supervised)

b) Start supervision on a selected Network Element (NE)

From screen "Network Element Synthesis" (see point **a) – 2)**) :

1) select interested Network Element (NE) clicking the left mouse button on it once

2) while NE is selected, with the right mouse button choose **Start Supervision**, and with the left mouse button execute it (click once)

wait until the symbol "**?**" becomes colored "●" (it means "NE in supervised state")

c) Alarm Surveillance

From screen "Network Element Synthesis" with NE in supervised state (see point **b) – 2)**):

1) select interested Network Element (NE) clicking the left mouse button on it once

2) while NE is selected, with the right mouse button choose **Show NE alarms**, and with the left mouse button execute it (click once)
(note: if **Show NE alarms** does not appear, wait a few seconds, then try again)
after a while, alarm screen will appear showing alarms. At the end close all the alarm screens.

d) Network Element login

From screen "Network Element Synthesis" with NE in supervised state (see point **b) – 2)**):

1) select interested Network Element (NE) clicking the left mouse button on it once.

e) Radio Frequency check

From USM screen of the NE (see point **d) – 1**):

1) menu: **Radio** ⇒ **Frequency**
after a while, **Frequency** screen will appear showing Transmitted and Received frequencies. At the end close the Frequency screen.

f) Transmitted and Received power levels

From USM screen of the NE (see point **d) – 1**):

1) menu: **Radio** ⇒ **Power Measurement** ⇒ **Start**
after a while, **Graphic Power Measurement** screen will appear

2) on **Measure** screen, click with left mouse button on **Show Details** to see detailed power measures. At the end close all measure screens.

g) Performance Monitoring

From USM screen of the NE (see point **d**) – **1**):

1) menu: **Performance**

All rights reserved. Passing on and copying of this document, use and communication of its contents not permitted without written authorization from Alcatel.

All rights reserved. Passing on and copying of this document, use and communication of its contents not permitted without written authorization from Alcatel.

3–5 SECOND LEVEL MAINTENANCE

3–5.1 Introduction

Please refer to chapter 3–1 on page 131 for an introduction to the basic concepts of equipment maintenance.

Second level maintenance consists of a set of operations which maintain or bring back the assembly to optimum operating conditions in a very short time, with the aim of obtaining maximum operational availability.
Second level maintenance is classified as:

– PREVENTIVE (periodic set of measurements and checks, independently of troubles)
– CORRECTIVE (troubleshooting and repair, in case of troubles)

This chapter describes the routine and corrective maintenance operations and is organized as follows:

– **Warnings** on page 152, including:
  - **EMC norms**
  - **Safety rules**
  - **Cautions to avoid equipment damage**

– **Preventive Maintenance** on page 153, including:
  - **Preventive Maintenance every year** on page 153
  - **Preventive Maintenance for Fans Unit** on page 154

– **Consequences of unit extraction in the IDU** on page 155

– **Corrective Maintenance** on page 157, including:
  - **General flow–chart** on page 157
  - **Alarm acknowledgment and attending** on page 158
  - **Trouble–Shooting starting with visual indications** on page 159
  - **Trouble–Shooting via Craft Terminal** on page 161
  - **IDU Unit replacement** on page 163
  - **ODU replacement** on page 169

– **Faulty unit repair and Repair Form** on page 169

The handbook parts that should be read before starting this chapter are:

– chapter 1–1 on page 19 **Introduction to the 9400 AWY radio system family**
– chapter 2–4 on page 87 **IDU operative information**
– chapter 2–6 on page 115 **ODU operative information**
– chapter 3–1 on page 131 **Maintenance Policy**
– chapter 3–3 on page 141 **Maintenance Tools and Spare Parts**
– chapter 3–4 on page 147 **First Level Maintenance**

3–5.2 Warnings

3–5.2.1 EMC norms

ATTENTION **EMC NORMS**

WHEN CARRYING OUT THE GIVEN OPERATIONS OBSERVE THE NORMS STATED IN PARA. A.4.3 ON PAGE 230

3–5.2.2 Safety rules

The **Safety Rules** stated in para.A.3 on page 224 describe the operations and/or precautions to observe to safeguard operating personnel during the working phases and to guarantee equipment safety. Please read them carefully before starting each action on the equipment.

SAFETY RULES

General

Carefully observe the front–panel warning labels prior to working on optical connections while the equipment is in–service.

Should it be necessary to cut off power during the maintenance phase, proceed to switch off the power supply units as well as cut off power station upstream (rack or station distribution frame)

Electrical safety

DANGER: Possibility of personal injury. Personal injury can be caused by –48 V dc.

DANGER: Possibility of personal injury. Short circuiting, low–voltage, low–impedance, dc circuits can cause severe arcing that can result in burns and/or eye damage. Remove rings, watches, and other metal jewelry before working with primary circuits. Exercise caution to avoid shorting power input terminals.

3–5.2.3 Cautions to avoid equipment damage

Read carefully para.2–4.1 on page 88.

All rights reserved. Passing on and copying of this document, use and communication of its contents not permitted without written authorization from Alcatel.

All rights reserved. Passing on and copying of this document, use and communication of its contents not permitted without written authorization from Alcatel.

3–5.3 Preventive Maintenance

Routine maintenance is a periodic set of measurements and checks. This maintenance discovers those devices whose function has deteriorated with time and therefore need adjustment or replacement.
Typically, digital equipment requires no routine maintenance.
The equipment allows to assess the quality of the connection links or counting the errored events and obtaining performance data.
The Performance Monitoring Application, described in para. 3–5.5.4.3 on page 161, allows this function.

3–5.3.1 Preventive Maintenance every year

It is suggested to carry out the following operations yearly:

[1] Mechanical checks

Check that:

- the power supply units,
- the coaxial cables,
- the waveguides,
- the mounting fixtures

are connected correctly.

[2] Grounding check

Check that the racks, subracks, and modules are grounded.

[3] Power cables check

SAFETY RULES

DANGER: Possibility of personal injury. Personal injury can be caused by –48 V dc.

DANGER: Possibility of personal injury. Short circuiting, low–voltage, low–impedance, dc circuits can cause severe arcing that can result in burns and/or eye damage. Remove rings, watches, and other metal jewelry before working with primary circuits. Exercise caution to avoid shorting power input terminals.

Make these operations:

- Check that the power cable is perfectly safety grounded.
- Make sure that the subrack has been tightly fastened to the rack with screws, to guarantee grounding (the rack is connected to the station ground).

[4] Operative checks

- Visual check:
  - During the normal operation, check the led normal condition, as specified in para.3–4.2 on page 147.
- Checks by Craft Terminal
  - Refer to the specific attachment of the Line–Up Guide (REF.[C] on page 244).

N.B. some suggested checks are indicated in para.3–4.3 on page 150.

3–5.3.2 Preventive Maintenance for Fans unit

The MTBF of the Fans Unit equipped in the IDU is over 30 years, provided that Environmental Conditions regarding sand and dust are in the limits specified by Recc. ETS 300 019 Class 3.1. Even though the operating environment is compliant with these limits, it is suggested to carry out the following operation every three years:

– pull out Fans Unit and clean fans removing dust and sand.

In the case of worse environmental conditions, perform this operation more frequently.

All rights reserved. Passing on and copying of this document, use and communication of its contents not permitted without written authorization from Alcatel.

All rights reserved. Passing on and copying of this document, use and communication of its contents not permitted without written authorization from Alcatel.

3–5.4 Consequences of unit extraction in the IDU

Generally, a unit can be extracted from the system for the following reasons:

- to replace it with a spare part during corrective maintenance
- to check a spare part taken from the spare part stock
- to restore the suspected faulty unit (after its successful replacement with a spare unit during corrective maintenance) to verify that it is really faulty.

The extraction of a unit has always some consequences on system behavior and performance that the Maintenance Operator must know in advance. The paragraphs reported in the table below summarize such consequences.

UNIT	PARAGRAPH	PAGE
MAIN	3–5.4.1	155
Extension	3–5.4.2	156
Access	3–5.4.3	156
FANS	3–5.4.4	156
Note on dummy plates	3–5.4.5	156

3–5.4.1 Consequences of the MAIN unit extraction

The time taken to extract the MAIN unit must be short and should be limited to the time strictly necessary for operation and maintenance purposes; it causes:

- interruption of the traffic on channel 1
- the NE not to be supervised because the Equipment controller is installed in this unit.
- equipment EMC performance loss
- incorrect equipment ventilation, with MTBF performance degradation.

Note for 1+1 configurations:

- before extracting the unit make sure that the traffic is transmitted over channel 0 (on the Extension unit). Otherwise, force with the CT the traffic onto channel 0.

3–5.4.2 Consequences of the Extension unit extraction

The time taken to extract the Extension unit must be short and should be limited to the time strictly necessary for operation and maintenance purposes; it causes:

- interruption of the traffic on channel 0
- equipment EMC performance loss
- incorrect equipment ventilation, with MTBF performance degradation.

Note for 1+1 configurations:

- before extracting the unit make sure that the traffic is transmitted over channel 1 (on the MAIN unit). Otherwise, force with the CT the traffic onto channel 1.

3–5.4.3 Consequences of the Access unit extraction

The time taken to extract the Access unit must be short and should be limited to the time strictly necessary for operation and maintenance purposes; it causes:

- complete interruption of the traffic
- equipment EMC performance loss
- incorrect equipment ventilation, with MTBF performance degradation.

3–5.4.4 Consequences of the FANS unit extraction

The time taken to extract the FANS unit must be short and should be limited to the time strictly necessary for operation and maintenance purposes.

The extraction of FANS unit causes:

- equipment EMC performance loss
- incorrect equipment ventilation, with MTBF performance degradation

ATTENTION

(caution to avoid equipment damage)

The absence of ventilation, with equipment powered on, will cause dangerous internal overtemperature.

3–5.4.5 Note on dummy plates

Dummy plates envisaged in 1+0 Extendable IDU shelf (see items **[11]** and **[12]** in Fig. 16. on page 66) must always be left screwed in their position during equipment normal operation. In fact, their absence causes:

- equipment EMC performance loss
- incorrect equipment ventilation, with MTBF performance degradation

All rights reserved. Passing on and copying of this document, use and communication of its contents not permitted without written authorization from Alcatel.

3–5.5 Corrective Maintenance

3–5.5.1 General flow–chart

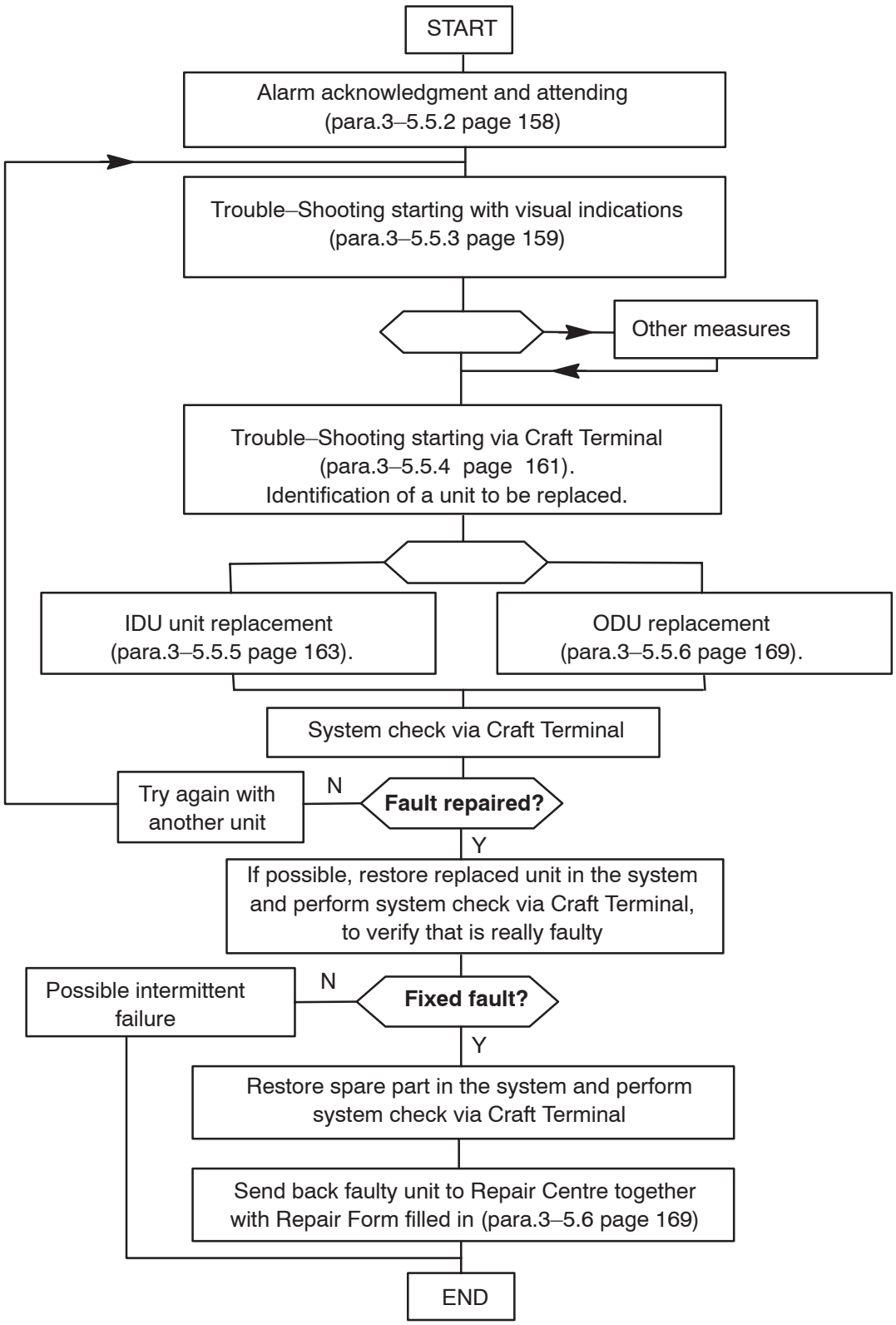

Fig. 57. Corrective Maintenance general flow–chart

All rights reserved. Passing on and copying of this document, use and communication of its contents not permitted without written authorization from Alcatel.

3–5.5.2 Alarm acknowledgment and attending

3–5.5.2.1 Alarm acknowledgment

Refer to Fig. 57. on page 157, for the position of this step inside the corrective maintenance general flow–chart.

The need for Operator intervention is notified:

– locally (on the front of the equipment or in the station):

  • when one of the alarm LEDs **MAJ – MIN** on the MAIN unit front plate lights up.

– remotely (in a TMN maintenance center) when the OS acknowledges the presence of problems in the station.

When the local Operator decides to manage the problem, he should carry out the alarm attending operation (see para. 3–5.5.2.2 on page 158 below). This operation has the scope of notifying locally in the station and remotely to the TMN maintenance center that a local operator is attending the problem.

3–5.5.2.2 Alarm Attending

See Fig. 55. on page 148:

– the detected alarm condition can be stored through push–button (1) (Alarm attending button) on the MAIN unit.

  This operation will turn OFF the LEDs **MAJ** / **MIN** and will light up the yellow LED **ATTD** on the MAIN unit (Attended). The local Operator could also attend the alarm via the craft terminal.

– a possible new alarm condition (following the Attending) will turn on the LEDs **MAJ** / **MIN**.

– when the fault has been repaired, the yellow LED (if the alarm had been attended) or the red ones (if the alarm had not been attended and no further alarms have occurred in the mean time) will turn off.

All rights reserved. Passing on and copying of this document, use and communication of its contents not permitted without written authorization from Alcatel.

All rights reserved. Passing on and copying of this document, use and communication of its contents not permitted without written authorization from Alcatel.

3–5.5.3 Troubleshooting starting with visual indications

Refer to Fig. 57. on page 157, for the position of this step inside the corrective maintenance general flow–chart.

Some problems may be localized through the LEDs indicated in para. 3–4.2 on page 147.
In any case, the inspection through the Craft Terminal is recommended before any unit replacement.

Flow–chart of Fig. 58. indicates LEDs on the MAIN unit that should be considered first.

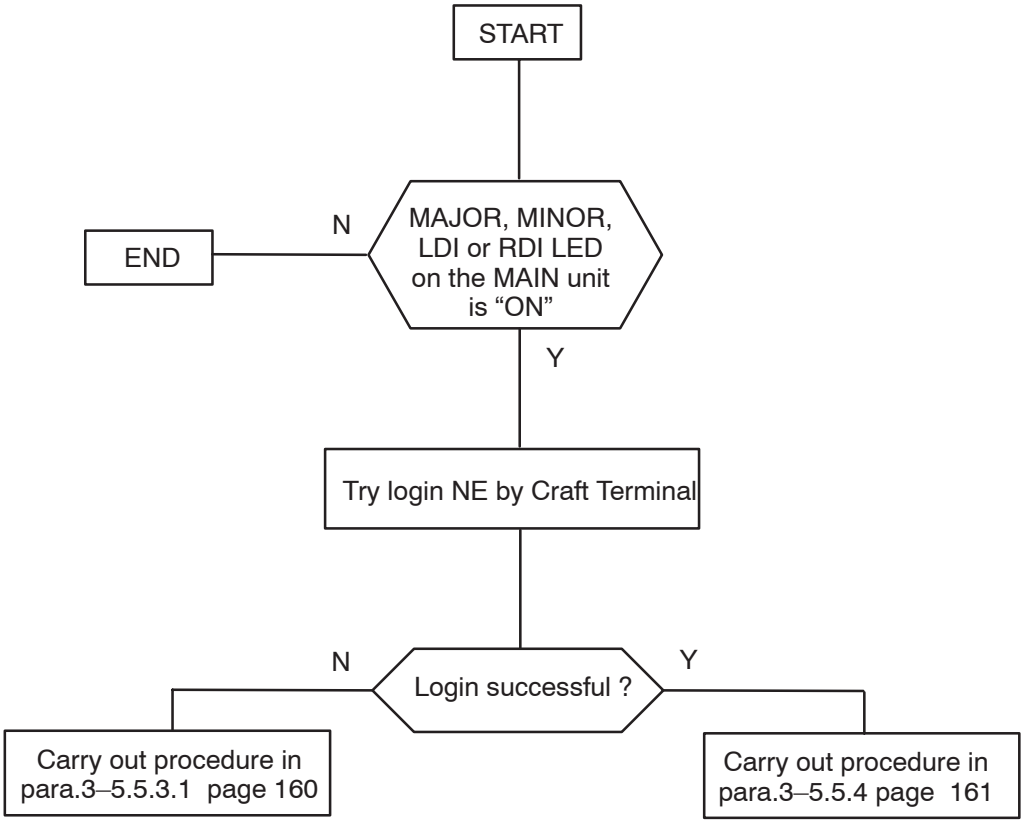

Fig. 58. Troubleshooting starting with visual indications

3–5.5.3.1 Problems with the Craft Terminal

Whenever the login with the Craft Terminal does not work, proceed with the following checks:

– Restart the Craft Terminal (logout and switch off/on).

– With the Craft Terminal connected to the equipment F–interface, open the 'Alcatel Lower Layer Manager' screen (by clicking with the mouse pointer on the Alcatel symbol in the MS–Windows menu bar). The fields to be verified in this screen are:

Port	Physical	OSI or Logical
COM1	ON	ON

– Verify that the CT port is effectively that connected by cable to equipment's F interface

– If 'Physical' is OFF, the problem can be due to:
- CT physical port faulty
- MAIN unit F–interface port faulty
- the cable

If possible, verify the correct working of the Craft Terminal and of the CT–F interface cable using them with another Alcatel equipment. If the problem still persists, solve the problem.
Otherwise, proceed with the MAIN unit replacement, or perform steps indicated in para.3–5.5.3.2 on page 160.

– If 'OSI/Logical' is OFF, the problem can be due to:
- FLASH CARD missing on MAIN unit (verify) or FLASH CARD/MAIN faulty

Proceed with the MAIN unit replacement, or perform steps indicated in para.3–5.5.3.2 on page 160.

3–5.5.3.2 MAIN unit or FLASH CARD replacement

If the Craft Terminal application does not respond (login unsuccessful):

1) push the RESET button on the MAIN unit and wait 10 minutes;

2) if, after 10 minutes, the Craft Terminal application responds, open the "Alarm status" procedure and proceed investigating the system state;

3) if, after 10 minutes, the Craft Terminal application does not respond, replace the MAIN unit, as described in para.3–5.5.5.2 on page 164;

4) if the problem still persists after the MAIN unit has been replaced, the failure or content corruption of the FLASH CARD must be suspected (a very extraordinary event); proceed with its replacement, as indicated in para.3–5.5.5.3 on page 165.

All rights reserved. Passing on and copying of this document, use and communication of its contents not permitted without written authorization from Alcatel.

All rights reserved. Passing on and copying of this document, use and communication of its contents not permitted without written authorization from Alcatel.

3–5.5.4 Troubleshooting via Craft Terminal

Refer to Fig. 57. on page 157, for the position of this step inside the corrective maintenance general flow–chart.

The ECT/RECT application includes several types of functions for system maintenance (used in line–up operations, too), as depicted in the following table:

FUNCTION	FUNCTION DESCRIPTION
Alarm surveillance	para.3–5.5.4.1 on page 161
Loopbacks	para. 3–5.5.4.2 on page 161
Operator's Controls of the protection switches	para. 3–5.5.4.3 on page 161
Tx mute functions	para. 3–5.5.4.4 on page 162
Performance Monitoring	para. 3–5.5.4.5 on page 162
Event Log	para. 3–5.5.4.6 on page 162

3–5.5.4.1 Alarm surveillance

The Alarm surveillance available with the CT allow the Operator to examine the alarms currently present in the equipment or in the link or in the PDH network.

The troubleshooting operating instructions and details of the alarms for each card and relevant indications are included in the section Maintenance of the CT OPERATOR'S HANDBOOK.

The operating instructions make it possible to identify the faulty unit.

Having located the suspected faulty unit, replace it with a spare one (refer to para. 3–5.5.5 on page 163).

3–5.5.4.2 Loopbacks

The loopbacks (settable by CT) give the possibility to perform some functional tests, thus making the fault location and maintenance tests faster and easier. The loopbacks are explained in para. 4–1.7 on page 203. To implement the loopbacks, refer to the **CT OPERATOR'S HANDBOOK**.

3–5.5.4.3 Operator's Controls of the protection switches

In certain troubleshooting conditions, changing the state of the protection switches can be useful to fix problems.

Details on protection switches and on relevant Operator's Controls, for each system configuration, are given in the suitable paragraphs of para. 4–1.6 on page 199.

In this chapter are described the logic actions that can be carried out. For further information and operative procedures, refer to the **CT OPERATOR'S HANDBOOK**.

3–5.5.4.4 Tx mute function (local and remote)

This facility allows to switch off the transmitter. This facility can be useful during commissioning to avoid producing interference if the frequency is not yet properly set.

For further information and operative procedures, refer to the **CT OPERATOR'S HANDBOOK**.

3–5.5.4.5 Performance Monitoring

The Performance Monitoring is responsible for quality events counting and reporting.

For further information and operative procedures, please refer to the **CT OPERATOR'S HANDBOOK**.

3–5.5.4.6 Event Log

The generic events occurred and discriminated by the NE are stored in one or more Event Log files.

The ELB (Event Log Browsing) application embedded in the 9400AWY SWP allows the Operator to read such log files, in order to have historical data that can be useful to troubleshoot the equipment or the link or the PDH network, in case of multiple alarm conditions or intermittent alarms.

The event log file examination is quite complex; it is reserved to Alcatel skilled personnel as a debug tool (only using filters on the not meaningful events, it is possible to understand the meaning of the stored data).

For further information and operative procedures, refer to the **CT OPERATOR'S HANDBOOK.**

All rights reserved. Passing on and copying of this document, use and communication of its contents not permitted without written authorization from Alcatel.

All rights reserved. Passing on and copying of this document, use and communication of its contents not permitted without written authorization from Alcatel.

3–5.5.5 IDU unit replacement

Refer to Fig. 57. on page 157, for the position of this step inside the corrective maintenance general flow–chart.

3–5.5.5.1 Introduction

Specific instructions/cautions according to the unit type are given in the paragraphs listed in Tab. 54. below.

Tab. 54. IDU unit replacement procedures

UNIT	PARAGRAPH	PAGE
MAIN IDU unit	3–5.5.5.2	164
FLASH CARD (housed on MAIN unit)	3–5.5.5.3	165
EXTENSION IDU unit	3–5.5.5.4	166
ACCESS unit	3–5.5.5.5	166
FANS unit	3–5.5.5.6	167

These procedures refer, for the common parts, to the **general procedure** described in para. 3–5.5.5.7 on page 168.

3–5.5.5.2 MAIN IDU unit replacement procedure

N.B. Note for 1+1 configurations:

– before extracting the unit make sure that the traffic is transmitted over channel 0 (on the EXTENSION unit). Otherwise, force with the CT the traffic onto channel 0.

[1] Get a spare unit with the same P/N; do not touch the electronic components.

[2] Wear the antistatic protection armlet and connect its termination to a grounded structure.

[3] Turn off (position “O”) the unit with the switch on the unit front panel.

[4] Disconnect all cables from the front panel. Suggestion: before doing it, if no labels are present on the cables, put labels with markings to be able to reconnect them correctly.

[5] Unscrew the two screws on the sides.

[6] Extract the unit by using the levers on the sides.

[7] Extract the FLASH CARD.

[8] Insert the FLASH CARD in the spare unit.

[9] Insert the spare unit by using the levers on the sides.

[10] Now you can take off the antistatic protection armlet

[11] Screw the two screws on the sides of the unit.

[12] Connect again all the cables on the front panel exactly as they were connected before the unit was extracted.

[13] Turn on (position “I”) the unit.

[14] Wait some minutes (software download is usually carried out toward Supervisory Units)

[15] Check the system status through LED visual inspection and through the Craft Terminal.

Note on the **Flash Card identifier**

Please read para.2–4.3.2.6 on page 105.
If the inserted MAIN IDU spare unit has no **Flash Card identifier** label sticked on it or the label does not match the flash card effectively inserted, put a label with the correct information (if not available, create a label writing the information on a self–adhesive sticker).

All rights reserved. Passing on and copying of this document, use and communication of its contents not permitted without written authorization from Alcatel.

All rights reserved. Passing on and copying of this document, use and communication of its contents not permitted without written authorization from Alcatel.

3–5.5.5.3 FLASH CARD replacement procedure

The need for this replacement is described in para. 3–5.5.3.2 on page 160.

The FLASH CARD contains the system software (see para.2–4.4 on page 106). Many types are envisaged: its identification is described in para.2–4.4.2 on page 106.

Proceed as follows:

[1] read the **Flash Card Name** on the label affixed on Main IDU Unit and according to it, retrieve the Flash Card P/N through the sublist **FLASH CARD** in Tab. 14. on page 60

[2] get a spare Flash Card with the same P/N; leave it in its protective envelope until you have worn the antistatic protection armlet

[3] wear the antistatic protection armlet (see Fig. 88. on page 231) and connect its termination to a grounded structure

[4] turn off (position “O”) the Main IDU Unit switch (position **(12)** in Fig. 31. on page 101)

[5] disconnect all cables from the Main IDU Unit front panel. Suggestion: before doing it, if no labels are present on the cables, put labels with markings to be able to reconnect them correctly.

[6] unscrew the two screws on the Main IDU Unit sides

[7] extract the Main IDU Unit by using the levers on the sides

[8] extract the faulty Flash Card from the Main IDU Unit, verify that its P/N is equal to that of the spare and insert the spare Flash Card into the Main IDU Unit
Refer to:
- Fig. 30. on page 100 for the position of the **FLASH CARD** inside the EQUIPMENT CONTROLLER BABY BOARD
- Fig. 33. on page 106 for Flash Card profile and insertion direction

[9] insert the Main IDU Unit by using the levers on its sides

[10] now you can take off the antistatic protection armlet

[11] screw the two screws on the sides of the Main IDU Unit

[12] connect again all the cables on the Main IDU Unit front panel exactly as they were connected before the unit was extracted

[13] turn on (position “I”) the Main IDU Unit switch (position **(12)** in Fig. 31. on page 101)

[14] now you must perform all operations regarding the NE SW download and data definition, as it is was done at the equipment SW first time installation:

- SWP download from C.T. to NE
- NE configuration data definition

as explained in C.T. Operator’s Handbook.

3–5.5.5.4 EXTENSION IDU unit replacement procedure

N.B. Note for 1+1 configurations:

– before extracting the unit make sure that the traffic is transmitted over channel 1 (on the MAIN unit). Otherwise, force with the CT the traffic onto channel 1.

[1] Get a spare unit with the same P/N; do not touch the electronic components.

[2] Wear the antistatic protection armlet and connect its termination to a grounded structure.

[3] Turn off (position “O”) the unit with the switch on the unit front panel.

[4] Disconnect all cables from the front panel. Suggestion: before doing it, if no labels are present on the cables, put labels with markings to be able to reconnect them correctly.

[5] Unscrew the two screws on the sides.

[6] Extract the unit by using the levers on the sides.

[7] Insert the spare unit by using the levers on the sides.

[8] Now you can take off the antistatic protection armlet.

[9] Screw the two screws on the sides of the unit.

[10] Connect again all the cables on the front panel exactly as they were connected before the unit was extracted.

[11] Turn on (position “I”) the unit.

[12] Check the system status through LED visual inspection and through the Craft Terminal.

3–5.5.5.5 ACCESS unit replacement procedure

[1] Get a spare unit with the same P/N; do not touch the electronic components.

[2] Wear the antistatic protection armlet and connect its termination to a grounded structure.

[3] Disconnect all cables from the front panel. Suggestion: before doing it, if no labels are present on the cables, put labels with markings to be able to reconnect them correctly.

[4] Unscrew the two screws on the sides.

[5] Extract the unit by using the levers on the sides.

[6] Insert the spare unit by using the levers on the sides.

[7] Now you can take off the antistatic protection armlet

[8] Screw the two screws on the sides of the unit.

[9] Connect again all the cables on the front panel exactly as they were connected before the unit was extracted.

[10] Check the system status through LED visual inspection and through the Craft Terminal.

All rights reserved. Passing on and copying of this document, use and communication of its contents not permitted without written authorization from Alcatel.

All rights reserved. Passing on and copying of this document, use and communication of its contents not permitted without written authorization from Alcatel.

3–5.5.5.6 Fans unit replacement

Whenever the alarm regarding Fans Unit arises, you should be aware of the following:

– the alarm is always MINOR (because traffic is not affected) and arises due to the failure of one, two or of all the three fans of the unit; generally, when the alarm arises, it is assumed that one fan only is not working;

– this condition should be considered together with:

  - the IDU–housing–room effective environmental temperature, taking into consideration that the loss of all fans can produce an overtemperature of about 20 ^{0}C inside the IDU;
  - the temperature limits specified in para. 1–2.10 on page 56.

  because an excessive internal temperature could decrease the equipment overall MTBF.

Finally, the Fans unit alarm is a minor alarm and usually does not require an immediate intervention; nevertheless, in case of alarm, it is suggested to replace the unit without waiting a very long time.

For unit replacement refer to the general procedure (para. 3–5.5.5.7 on page 168), taking into account that the front plate must be removed in order to access the unit and to restore it after replacement.

ATTENTION

(caution to avoid equipment damage)

The screw tightening torque for fixing the front plate to the subrack must be:

2.8 kg x cm (0.28 Newton x m) ± 10 %

Exceeding this value may result in screw breaking.

3–5.5.5.7 General replacement procedure

The replacement of a suspected faulty unit with one taken from the spare part stock must be done in the following way:

1) get the spare from the spare part stock verifying that its P/N is like that of the unit/module to be replaced (see para.3–3.3.3 on page 145 for cautions); do not touch the electronic components

2) disconnect all cables from the front plate. Suggestion: before doing it, if no labels are present on the cables, put labels with markings to be able to reconnect them correctly;
N.B. to extract Cables 1.0/2.3, use the special extractor (see Fig. 53. on page 143)

3) to extract a plug–in board:

– wear the antistatic protection device kit (see Fig. 88. on page 231) and connect its termination to a grounded structure

ATTENTION

(caution to avoid equipment damage)
this avoids the possible damage of the electronic devices for electrostatic discharges

– turn off the screws present into the extraction/insertion levers of the board

ATTENTION

(caution to avoid equipment damage)
this avoids the breakage of levers

– operate the levers to extract the board

4) insert the spare unit by using the levers on the sides.

5) now you can take off the antistatic protection device kit

6) turn on the screws present into the extraction/insertion levers of the board

ATTENTION

(caution to avoid equipment damage)
The screw tightening torque for fixing the units to the subrack must be:

2.8 kg x cm (0.28 Newton x m) ± 10 %

Exceeding this value may result in screw breaking.

7) re–connect all cables on the front plate exactly as they were connected before unit extraction.

8) wait some minutes (software download is usually carried out toward Supervisory Units)

9) check the system status through LED visual inspection and through the Craft Terminal.

All rights reserved. Passing on and copying of this document, use and communication of its contents not permitted without written authorization from Alcatel.

All rights reserved. Passing on and copying of this document, use and communication of its contents not permitted without written authorization from Alcatel.

3–5.5.6 ODU replacement

N.B. Note for 1+1 configurations:

– before replacing the ODU make sure that the traffic is transmitted over the other channel. Otherwise, force with the CT the traffic onto the other channel.

[1] Get a spare unit with the same P/N.

[2] Switch off the ODU by using the ON/OFF switch of the relevant IDU unit (MAIN or EXTENSION unit).

[3] Disconnect the IDU–ODU cable at ODU side.

[4] Change the ODU.

[5] Reconnect the IDU–ODU cable at ODU side.

[6] Switch on the ODU by using the ON/OFF switch of the relevant IDU unit (MAIN or EXTENSION unit).

[7] Check with the CT that there are no alarms.

3–5.6 Faulty unit repair and Repair Form

Refer to Fig. 57. on page 157, for the position of this step inside the corrective maintenance general flow–chart.

3–5.6.1 Faulty unit sending back to repair center

Faulty unit repair must be done by authorized repair centers only.

3–5.6.2 Repair Form filling

To facilitate repair operation, data on the faulty unit must be reported on the form shown in Fig. 59. on page 170.

The repair form must be filled–in with as much data as possible and returned to Alcatel together with the faulty unit.

ALCATEL

REPAIR FORM

Fill in this form and affix it to the faulty unit to be returned to Alcatel

TO BE FILLED IN BY THE SENDER

CUSTOMER NAME

ORDER NUMBER/CONTRACT NUMBER

SITE

BRANCH/UNIT/COUNTRY

SYSTEM/EQUIPMENT

PRODUCT RELEASE

EQUIPMENT SOFTWARE PART NUMBER

STATION/RACK

SUBRACK

SLOT

MNEMONIC

ALCATEL PART NUMBER

SERIAL NUMBER

FAULTY UNIT SOFTWARE VERSION

FAULT PHASE		REASON FOR REPAIR		PRESUMED CAUSE	
INSTALLATION / **TURN ON**	☐	CLEAR FAULT	☐	DROP IN PERFORMANCE	☐
OPERATION	☐	INTERMITTENT FAULT	☐	UPGRADE/QUALITY ALERT	☐
MAINTENANCE	☐	TEMPERATURE FAULT	☐	INTERNAL	☐
				EXTERNAL – LIGHTNING	☐
				EXTERNAL – AIR COND.	☐
				EXTERNAL – OTHER	☐

FAULT STILL PRESENT AFTER REPAIR ☐

DATE

NAME OF SENDER

COMMENTS

TO BE FILLED IN BY THE REPAIR OPERATOR

PROCESSING				FAULTS DETECTED					
NO FAULTS FOUND	☐ A	UPGRADE	☐ I	SOLDERING / WIRING	☐ C	COMPONENT	☐ F–L	ADJUSTMENT	☐ P
STANDARD REPAIRING	☐ B–D	NOT REPAIRABLE (REJECTED)	☐ M	MECHANICAL	☐ V1	PRINTED CIRCUIT BOARD	☐ V1	DIRT	☐ V2
QUALITY ALERT	☐ I	SUBSTITUTED	☐ S–X			CORROSION	☐ V3	OTHER	☐

NOTE : LETTERS ARE FOR FACTORY USE

COMMENTS

DATE	REPAIRING NUMBER	REPAIRING CENTRE	NAME OF REPAIR OPERATOR

Fig. 59. Repair form

All rights reserved. Passing on and copying of this document, use and communication of its contents not permitted without written authorization from Alcatel.

SECTION 4: FUNCTIONAL DESCRIPTION

It provides the second–level description of 9400AWY Rel.1.0 equipment.

SECTION CONTENT	PAGE
Chapter 4–1 – System description It gives the detailed description of the equipment features and subsystems that have not been given in the previous part of this handbook.	173
Chapter 4–2 – Alarms It describes the 9400AWY Rel.1.0 alarms managed in the SWP version this handbook issue refers to.	213

All rights reserved. Passing on and copying of this document, use and communication of its contents not permitted without written authorization from Alcatel.

All rights reserved. Passing on and copying of this document, use and communication of its contents not permitted without written authorization from Alcatel.

All rights reserved. Passing on and copying of this document, use and communication of its contents not permitted without written authorization from Alcatel.

4–1 SYSTEM DESCRIPTION

This chapter gives the detailed description of the equipment features and subsystems that have not been given in the previous part of this handbook.

Information given in the following is:

- **Functional description and components** on page 174
- **Control subsystem hardware architecture** on page 179
- **IDU functional description** on page 181
- **ODU functional description** on page 189
- **Radio Transmission features** on page 191
- **Protection schemes** on page 199
- **Loopbacks** on page 203
- **Network management and interworking** on page 206

4–1.1 Functional description and components

This paragraph sums–up the equipment functions and defines its components from the SW point of view:

– **Functions and configurations** herebelow
– **IDU and ODU Components** on page 175:
  - **IDU** on page 175
  - **ODU** on page 176
  - **Allowed Equipment Types** on page 176
  - **Remote Inventory Management** on page 178

4–1.1.1 Functions and configurations

ULS NE (i.e.9400AWY from the network management point of view) has the aim to multiplexer/demultiplexer the main tributaries (up to 16 E1/16 DS1 or 1 E3/1 DS3) with different modulation formats.
The following Tab. 55. summarizes the relation among market, product type tributaries and modulation.

Tab. 55. Markets, product type, tributaries and modulations forecasted

Market	Tributary	Modulation
ETSI	2xE1	4QAM
	4xE1	4QAM / 16QAM
	8xE1	4QAM /16QAM
	16xE1	4QAM / 16QAM
	1xE3	4QAM / 16QAM
ANSI	4xDS1	4QAM
	8xDS1	4QAM / 16QAM
	16xDS1	4QAM / 16QAM
	1xDS3	4QAM / 16QAM

The main functions performed by IDU and ODU of ULS equipment are the following:

– Multiplexer/Demultiplexer
  The multiplexer function receives main tributaries (see Tab. 55. above) and generates a PDH frame. The demultiplexer function receives a PDH frame and generates main tributaries.

– Signal Protection switch (if any)
  The function provides one protection channel for the main signal against channel–associated failures for both hardware failures and temporary signals degradation or losses due to propagation effects (e.g. rain) according to equipment configuration.

– Radio Physical Interface (AWY)
  The function converts a radio frequency signal into an internal logic level signal, and vice versa (RPPI). Specifically, the following functions are performed:
  - Modulation and Tx functions in the transmit side
  - Demodulation and Rx functions in the receive side

ULS NE can be composed by:
– one channel (1+0 configurations and 1+0 extendable configurations);
– two channels (1+1 configurations).

The configuration ’2+0’ is not supported.

All rights reserved. Passing on and copying of this document, use and communication of its contents not permitted without written authorization from Alcatel.

All rights reserved. Passing on and copying of this document, use and communication of its contents not permitted without written authorization from Alcatel.

4–1.1.2 IDU and ODU Components

The ULS NE is composed by two different parts: the indoor and the outdoor part. In the following they are described from physical and management point of view.

4–1.1.2.1 IDU

The indoor part is composed by one shelf (see Fig. 60. and Fig. 61.). It contains the following units:

– **(1+0) IDU**
  - slot 1: **ACCESS** Unit
  - slot 2: **Main** Unit

slot 1: **ACCESS** Unit
slot 2: **MAIN** Unit

Fig. 60. (1+0) IDU

– **(1+1) IDU**
  - slot 1: **ACCESS** Unit
  - slot 2: **Extension** Unit
  - slot 3: **Main** Unit
  - slot 4: **FAN** unit

slot 1: **ACCESS** Unit	slot 4: **FAN** Unit (**N.B.**)
slot 2: **EXTENSION** Unit (**N.B.**)	
slot 3: **MAIN** Unit	

Fig. 61. (1+1) IDU

N.B. In the 1+1 sub–equipped configurations (1+0 EXTENDABLE), slots 2 and 4 are not used.

The **ACCESS** unit accommodates the connectors referred to E1/E3/DS1/DS3 tributaries, user service channel, housekeeping and summarizing, NMS V11 and G703 interfaces, and a telephone jack.

The **Main** Unit contains the MULDEM, the PQECRC and the Power Supply units. The MULDEM unit manages the ETSI 1xE3/16xE1 and ANSI 1xDS3/16xDS1 tributaries, the Mux/Demux and the cable interface functions. The PQECRC unit implements the Equipment and IDU Controller functions. The Data unit implementing Ethernet functions can be plugged onto the Main unit. It is not supported in the current release. The Main unit is used both in 1+0 and 1+1 configurations.

The **Extension** Unit contains the MULDEM and the Power Supply units. The Hitless unit and the Data unit implementing Ethernet functions can be plugged onto the Extension unit. Data unit is not supported in the current release. The Extension unit is used only in 1+1 configurations.

The **FAN** unit contains 3 fans in order to provide the necessary ventilation to the IDU shelf (t is supported only in 1+1 configurations). Only the FAN unit is shown at SNMP interface, independently from the number of fans composing it.

4–1.1.2.2 ODU

One ODU type is managed in the Outdoor part (electrical ODU)
Each ODU contains a PQECRC unit which implements the ODU Controller functions.

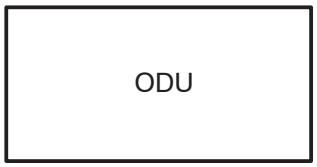

Fig. 62. (1+0) ODU (electrical or optical)

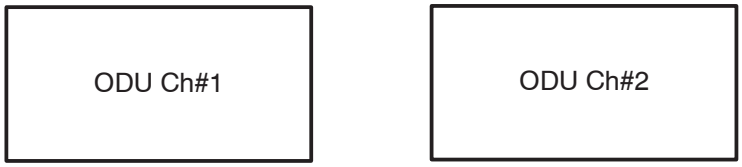

Fig. 63. (1+1) ODU (only electrical)

4–1.1.2.3 Allowed Equipment Types

This paragraph provides information on the allowed equipment types for all the configurations supported by ULS NE.

[1] Shelves Equipment Types
The following Tab. 56. provides the shelves equipment types allowed for each supported NE configuration and market type:

Tab. 56. Shelves Equipment Types

NE Configuration	Market Type	Shelf position	Allowed Equipment Type Description	Allowed Equipment Type	Equipment Label
1+0	(**note 1**)	1	IDU 1+0 Shelf	IDU10	IDU
	ETSI	2	ODU 1+0 4/16 QAM ETSI	ODU–E	ODU Ch#1
	ANSI		ODU 1+0 4/16 QAM ANSI	ODU–A	
1+1 (**note 2**)	(**note 1**)	1	IDU 1+1 Shelf	IDU11	IDU
	ETSI	2	ODU 1+0 4/16 QAM ETSI	ODU–E	ODU Ch#1
	ANSI		ODU 1+0 4/16 QAM ANSI	ODU–A	
	ETSI	3	ODU 1+0 4/16 QAM ETSI	ODU–E	ODU Ch#0
	ANSI		ODU 1+0 4/16 QAM ANSI	ODU–A	

(**note 1**) The equipment types allowed for IDU shelf are market type independent.
(**note 2**) All the 1+1 configurations. In case of 1+0 extendable configurations shelf position 3 is not supported.

All rights reserved. Passing on and copying of this document, use and communication of its contents not permitted without written authorization from Alcatel.

All rights reserved. Passing on and copying of this document, use and communication of its contents not permitted without written authorization from Alcatel.

[2] Slots and Sub–slots Equipment Types

The following tables indicate the allowed equipment types for each slot inside each shelf type and if the equipment expected value is settable by the operator.

- **IDU**

Tab. 57. IDU allowed board/plug–in types in (1+0) configurations

IDU10			
Position	**Allowed Equipment Type Description**	**Allowed Equipment Type**	**Equipment Label**
1.1	Access Unit	ACCESS	IDU/ACCESS
1.2	Main Unit Full Range Supply (±24/±60 V) **n.b.1** Main Unit ±48/±60 V Range Supply	M2460 M4860	IDU/MAIN Ch#1

Tab. 58. IDU allowed board/plug–in types in (1+1) configurations

IDU11			
Position	**Allowed Equipment Type Description**	**Allowed Equipment Type**	**Equipment Label**
1.1	Access Unit	ACCESS	IDU/ACCESS
1.2 (**note 1**)	Not provisioned Extension Unit Full Range Supply (±24/±60 V) **n.b.1** Extension Unit ±48/±60 V Range Supply	EMPTY E2460 E4860	IDU/EXT Ch#0
1.2.1 (**note 2**)	Hitless Switch unit **n.b.2**	HSW	IDU/EXT/HSW Ch#0
1.3	Main Unit Full Range Supply (±24/±60 V) **n.b.1** Main Unit ±48/±60 V Range Supply	M2460 M4860	IDU/MAIN Ch#1
1.4	FAN unit	FAN	IDU/FAN

(**note 1**) In the 1+1 sub–equipped configurations this slot is empty.

(**note 2**) Position 1.2.1 is created only in the 1+1 Hitless configurations (HSB and FD).

n.b.1 the Main/Extension Units Full Range Supply (±24/±60 V) are presently not available

n.b.2 the Hitless Switch unit is not managed by SWP V.1.0.0 (will be managed from SWP V.1.0.1)

- **ODU**

No slot can be defined inside the ODU.

4–1.1.2.4 Remote Inventory Management

The Remote Inventory feature allows to store the information useful to identify the components of the product.
From management point of view the Remote Inventory data will be provided by the following equipment types:

- Main Unit (M2460, M4860, M4860H) **n.b.1**
- Extension Unit (E2460, E4860) **n.b.1**
- Hitless Switch Unit (HSW) **n.b.2**
- Access Unit (ACCESS)
- FAN unit (FAN)
- ODU unit (ODU–E, ODU–A)
- ODU FSO unit (ODUFSO–E, ODUFSO–A)

n.b.1/2 see previous page

For all the other equipment types the remoteInventoryStatus columnar object assumes the value “unavailable”.
The RI data of each sub–components unit (i.e. MULDEM in the IDU, MILOU in the ODU, OPTR in the ODUFSO) won’t be seen at SNMP management interface but only by means of factory tools.
Also the information about the equipment type can be read from the remote inventory data (‘Unit mnemonic’ field). All the units are provided in its own remote inventory data this type of information. It is used to identify the actual equipment type and then, eventually, to provide an equipment mismatch alarm, if the equipment type read from remote inventory data is different from the equipment expected provided by the managers.
If it isn’t possible to read the Remote Inventory information, a “Card Fail” alarm is declared.

All rights reserved. Passing on and copying of this document, use and communication of its contents not permitted without written authorization from Alcatel.

All rights reserved. Passing on and copying of this document, use and communication of its contents not permitted without written authorization from Alcatel.

4–1.2 Control subsystem hardware architecture

This paragraph describes briefly the control subsystem hardware architecture, defines the control elements, the function partitioning among them and the internal interfaces managed by this subsystem.

The control subsystem block diagram is shown in Fig. 64. on page 180.

4–1.2.1 Function partitioning

The control subsystem provides the resources to support the communication interfaces and the processing functions required by the NMS (Network Management System).

The functionalities performed by the control subsystem can be summarized as follows:
- Message Communication Function (MCF);
- Equipment Management Function (EMF);
  - Virtual Machine Management Function (VMMF);
  - Physical Machine Management Function on whole equipment basis (PMMF/E);
  - Physical Machine Management Function on unit basis (PMMF/U);
- Basic Functions (BF).

4–1.2.2 Control elements

The control elements supporting the functionalities described above are:
- Equipment controller (EC);
- ODU controller (ODUC).

[1] Equipment Controller

One EC has in charge the MCF, VMMF: it provides resources (physical interfaces and protocol stack) required for the communication between the NE and the management systems (OS and CT).
It performs all the control and management functions of the virtual machine (info model).
No protection of this control element is performed. In case of failure, the main tributaries transport capability is guaranteed.

EC is also in charge of the PMMF/E and PMMF/U–IDU: it provides the resources to support the control and management functions related to the real physical machine.

The EC is physically located on the ”µP Plug–in” of IDU MAIN board (para.4–1.3.5 on page 185).

[2] ODU Supervisory Unit

The ODUC has in charge the PMMF/U–ODU. This function requires a real time processing of the data coming from the ODU ASIC. The ODUC has the aim to provide an uniform interface towards the EC avoiding a EC dependency from the ODU HW.

Inside the IDU there is one single internal communication interface: the IDU backplane SPI interface.

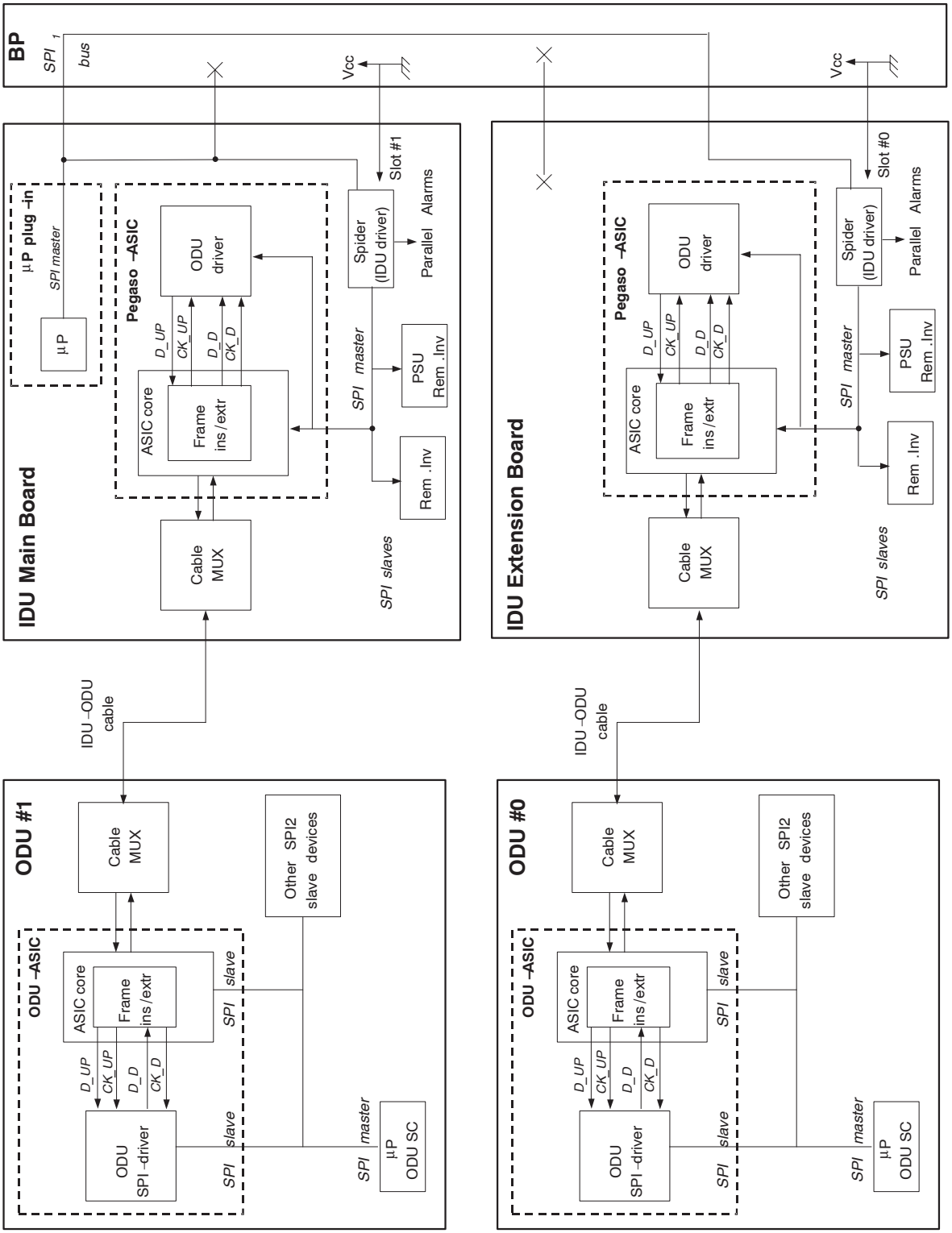

Fig. 64. Control subsystem block diagram

All rights reserved. Passing on and copying of this document, use and communication of its contents not permitted without written authorization from Alcatel.

All rights reserved. Passing on and copying of this document, use and communication of its contents not permitted without written authorization from Alcatel.

4–1.3 IDU functional description

The Indoor Unit (IDU) performs all customer interface requirements both as voice and data:

- NxE1/E3 for ETSI market
- NxDS1/DS3 for ANSI market
- EOW
- Service channels
- OS–TMN

and feeds the Outdoor Unit (ODU) via a single coaxial cable carrying:

- Base Band Transmission Signal (from IDU to ODU)
- Base Band Receiver Signal (from ODU to IDU)
- ODU Supply Voltage

The IDU is available in 3 configurations:

- 1+0 Compact IDU para.4–1.3.1 on page 182
- 1+0 IDU extendable para.4–1.3.2 on page 183
- 1+1 IDU para.4–1.3.3 on page 184

The boards used in IDU are:

- Access IDU unit para.4–1.3.4 on page 185
- Main IDU unit para.4–1.3.5 on page 185
- Extension IDU unit para.4–1.3.6 on page 188
- Fans unit
  The fans unit is present in the 1+1 version only, due to the dense packing, to provide equipment cooling.

4–1.3.1 1+0 Compact IDU configuration

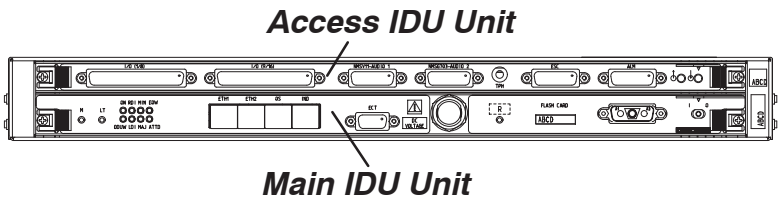

Fig. 65. 1+0 Compact IDU configuration

IDU 1+0 Compact operates, in a single subrack, customer interfacing and drives a single ODU. It consists of the following units:

- Access unit
- Main IDU unit

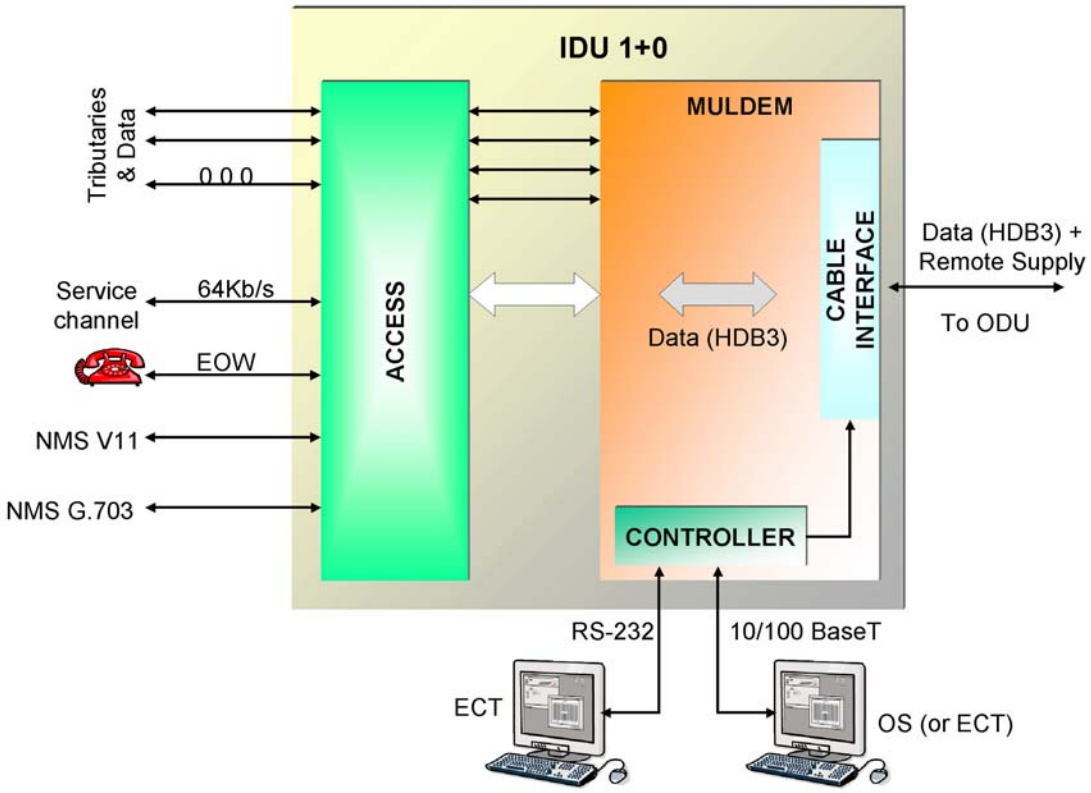

Fig. 66. 1+0 IDU block diagram

All rights reserved. Passing on and copying of this document, use and communication of its contents not permitted without written authorization from Alcatel.

All rights reserved. Passing on and copying of this document, use and communication of its contents not permitted without written authorization from Alcatel.

4–1.3.2 1+0 IDU Extendable configuration

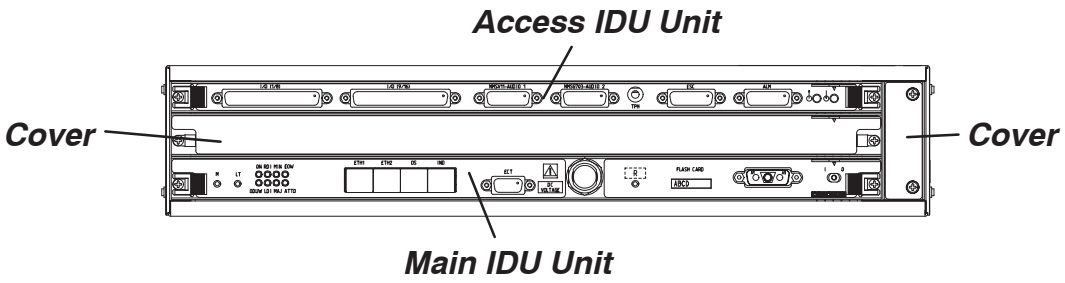

Fig. 67. 1+0 IDU Extendable configuration

1+0 Extendable IDU operates, in a single subrack bigger than the previous one, the customer interfacing and drives a single ODU. This subrack can accept, at a later stage, the Extension IDU unit and the Fans unit, and manage the second ODU to perform full 1+1 performance.

The 1+0 Extendable IDU consists of the following units:

– Access unit

– Main IDU Board

– Covers for Extension unit and Fans unit

The block diagram is as that of 1+0 compact version.

4–1.3.3 1+1 IDU configuration

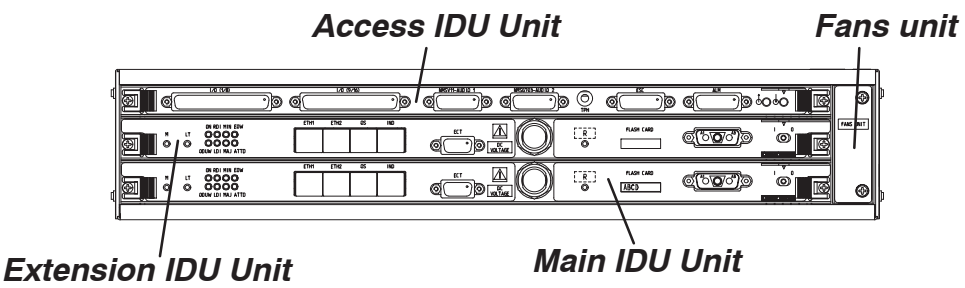

Fig. 68. 1+1 IDU configuration

1+1 IDU operates, in a single subrack, 1+0 extendable dimensioned, the customer interfacing and drives two ODUs making up standard 1+1 Mux/Demux protected configuration.

The 1+1 IDU consists of the following units:

- Access unit
- Main IDU Board
- Extension IDU Board
- Fans Unit

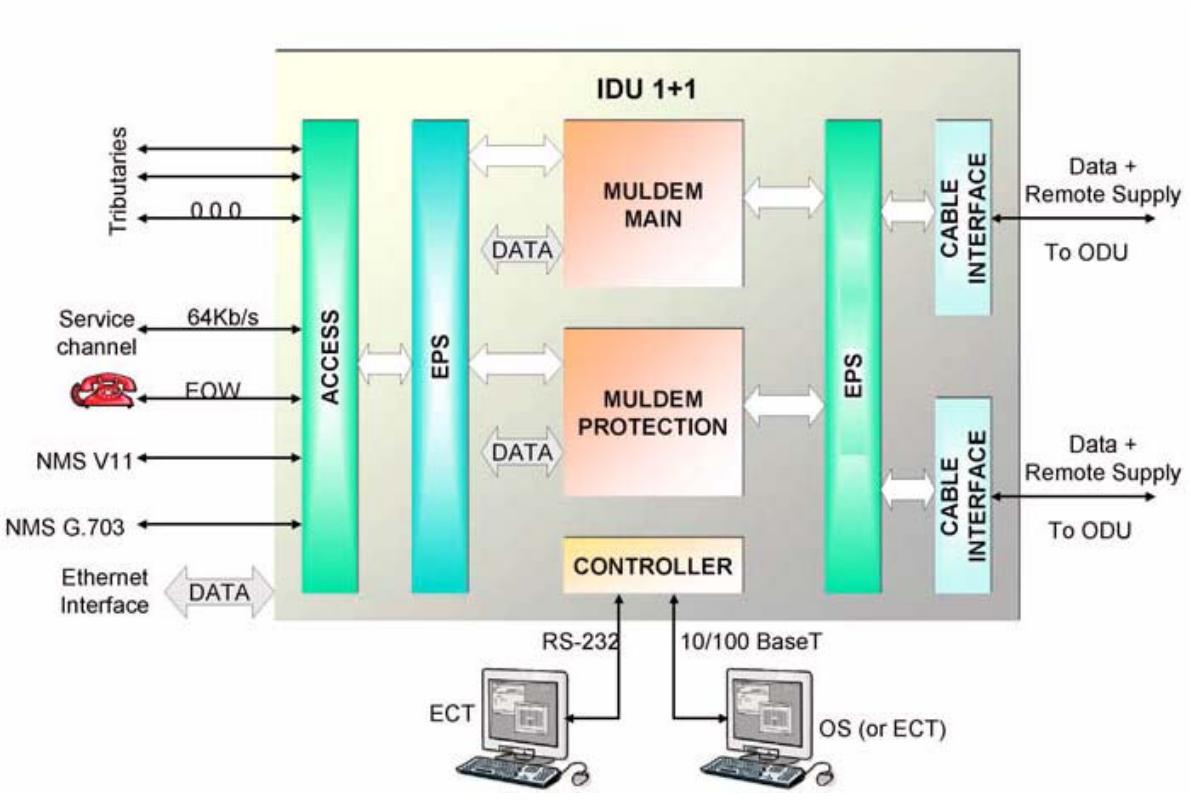

Fig. 69. 1+1 IDU block diagram

All rights reserved. Passing on and copying of this document, use and communication of its contents not permitted without written authorization from Alcatel.

All rights reserved. Passing on and copying of this document, use and communication of its contents not permitted without written authorization from Alcatel.

4–1.3.4 Access IDU unit

The Access IDU unit makes available the physical access to the customer with connector interfaces carrying:

- All the tributaries
- Network Management
- Engineering Order Wire
- EOW Jack
- Service Channel
- Housekeeping & Alarm

The board is completely passive and impedance matches the tributaries and executes splitting functions toward the MAIN unit and the EXTENSION unit (in case of 1+1 configuration).

4–1.3.5 Main IDU unit

The Main IDU unit is made up of 3 boards:

- Muldem board (the motherboard)
  A block diagram of the muldem board is shown in Fig. 70. on page 186; most part of the digital functions are integrated into the ”Pegaso” ASIC.
- DC/DC converter plug–in board. It is a module including DC/DC converters and filters. The power distribution for 1+1 systems is shown in Fig. 71. on page 187 (in 1+0 systems the IDU extension board is not equipped).
- Microprocessor plug–in board (PQ/ECRC).

The Main IDU unit performs all the following functions:

- Multiplexing/Demultiplexing of the Tributary signals connected with the Access Board, insertion/extraction from the main stream of the following signals:
  - EOW
  - Service Channel
  - Network Management System
- The Multiplexed/Demultiplexed signal toward the ODU interface is Framed/unframed implementing the following processes:
  - Scrambler/Descrambler
  - Coding/Decoding (Reed–Solomon) + Interleaving
- Cable Interface circuit adds to this signal the ODU supply voltage and ODU connector management information, feeding the ”N” connector available on the front panel of the board.
- Microprocessor Plug–In board performs all EC management functions (see point **[1]** on page 179).
- Flash Card, removable, stores the configuration of the terminal (details in para.2–4.4.3 on page 107).

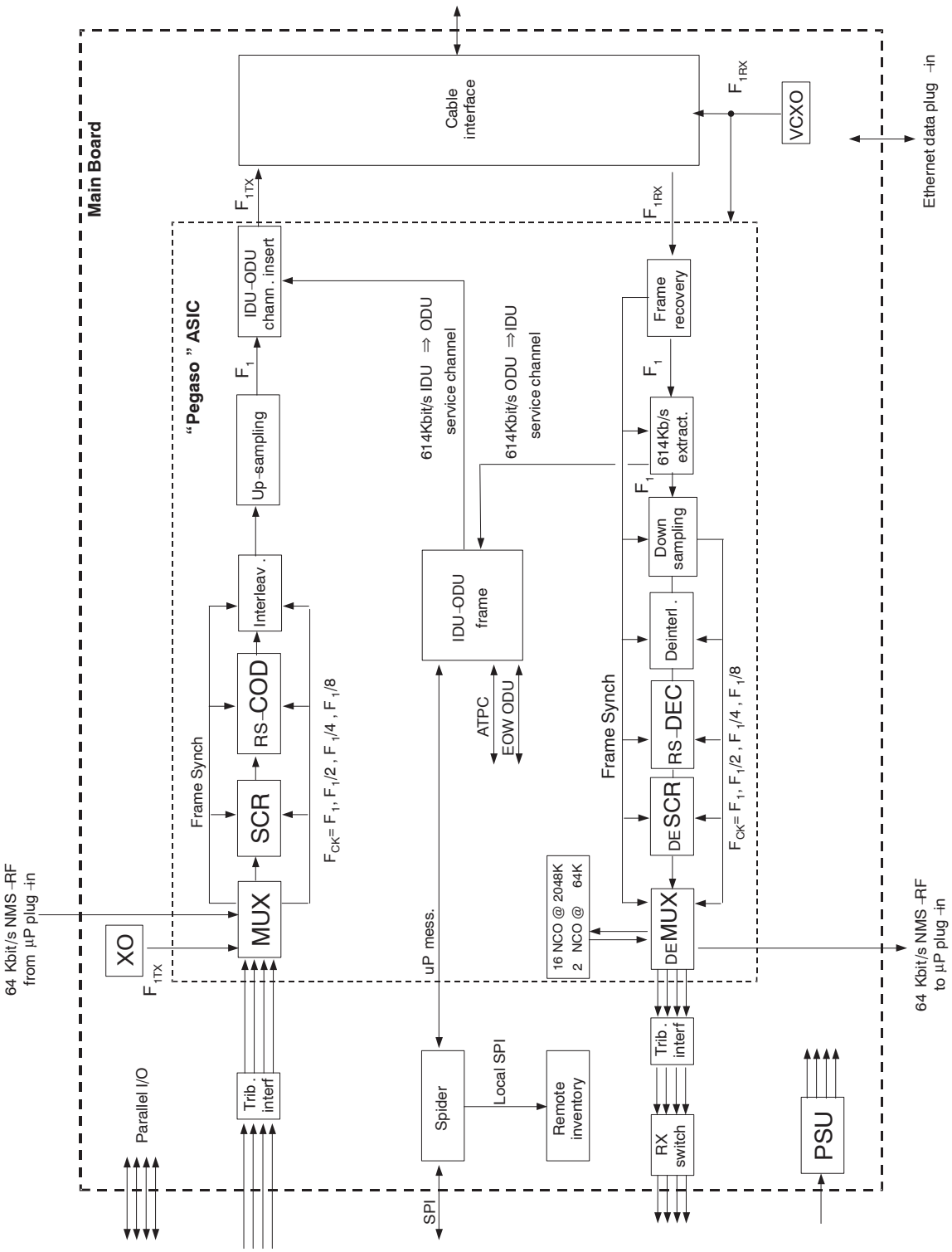

Fig. 70. Muldem Board block diagram

All rights reserved. Passing on and copying of this document, use and communication of its contents not permitted without written authorization from Alcatel.

All rights reserved. Passing on and copying of this document, use and communication of its contents not permitted without written authorization from Alcatel.

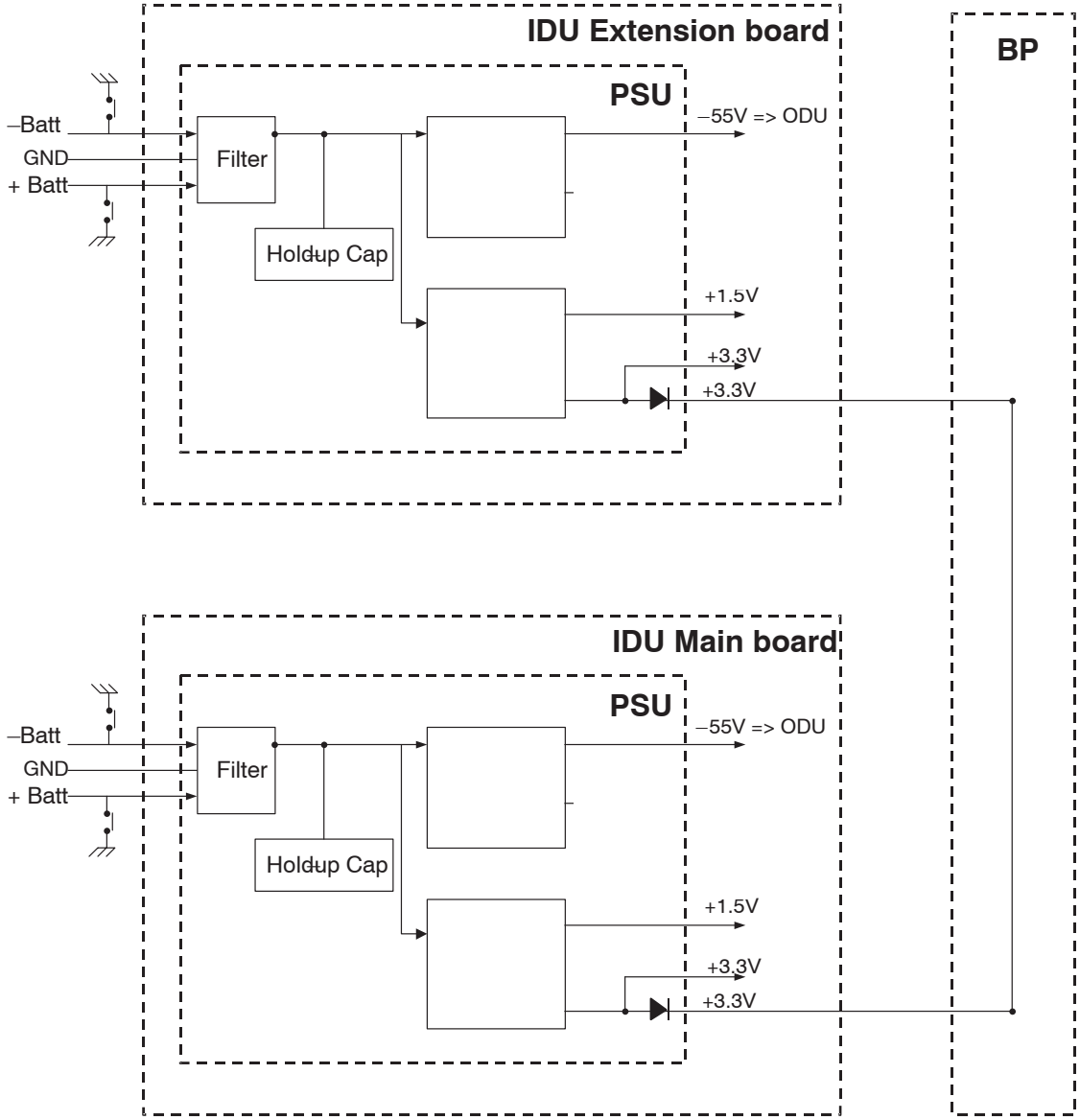

Fig. 71. Power distribution in 1+1 systems

4–1.3.6 Extension IDU unit

The Extension IDU unit is made up of two boards:

– Muldem board (the motherboard); see Fig. 70. on page 186

– DC/DC converter plug–in board; Fig. 71. on page 187

(These two boards perform the same functions carried out in the Main IDU unit).

The Extension IDU unit performs all the following functions:

– Multiplexing/Demultiplexing of the Tributaries signals connected with the Access Board, insertion/extraction from the main stream of the following signals:

  - EOW
  - Service Channel
  - Network Management System

– The Multiplexed/Demultiplexed signal toward the ODU interface is Framed/unframed implementing the following processes:

  - Scrambler/Descrambler
  - Coding/Decoding (Reed–Solomon) + Interleaving

– Cable Interface circuit adds to this signal the ODU supply voltage and ODU connector management information, feeding the ”N” connector available on the front panel of the board.

All rights reserved. Passing on and copying of this document, use and communication of its contents not permitted without written authorization from Alcatel.

4–1.4 ODU functional description

The Outdoor unit is made up of the following sections:

- Modem and IF section
- Local Oscillator
- Tx IF section
- Rx IF section
- RF section
- Diplexer
- DC/DC converter

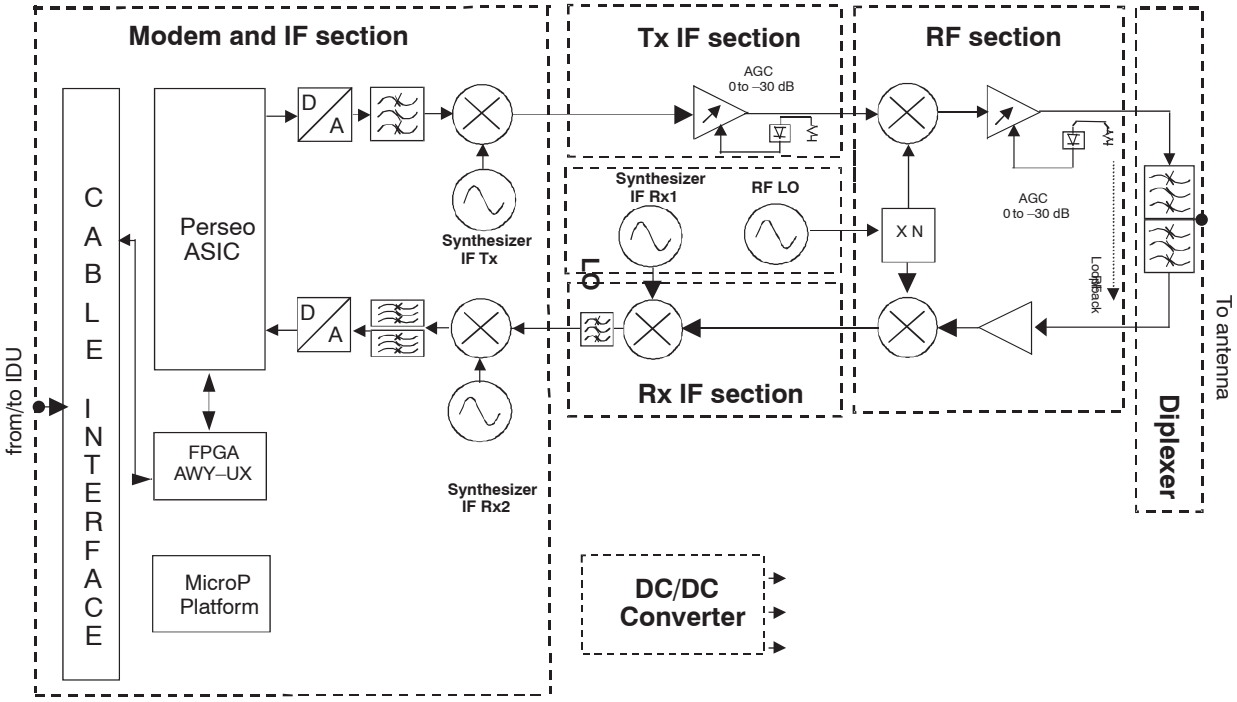

Fig. 72. ODU block diagram

All rights reserved. Passing on and copying of this document, use and communication of its contents not permitted without written authorization from Alcatel.

Modem and IF Section

Cable interface

The cable interface between IDU and ODU allows to carry over the coaxial cable:

- the transmit and receive data streams (and interface these streams to the modem on ODU side),
- the control signals and service channel.
- the DC power supply from the IDU to the ODU

Modem section

The modem section performs the 4 QAM or 16 QAM modulation and demodulation functions, with embedded digital filtering and equalization. It also incorporates the analog to digital and digital to analog conversions.

IF section

The IF section incorporates the quadrature modulator (respectively the quadrature demodulator) for the up–conversion (respectively down–conversion) to a transmit IF (respectively from a receive IF). It performs base–band filtering and AGC.

IF frequencies are variable in order to cope with all frequency spacing .

Local Oscillator

There is one single Local Oscillator both for transmit and receive RF units.

It is electronically tuned, by software, to the requested frequency, providing frequency agility over a quarter of the frequency plan.

RF Section (Front End)

- RF transmitter (Tx)
  This module up–converts and amplifies the RF signal and sends it to the Diplexer.
  The output power is regulated with a feedback loop.
  The module incorporates a mute function in case of transmitter failure.

- RF Receiver (Rx)
  The receiver performs low noise amplification of the received RF signal and down–converts it by mixing with the LO in a mixer. It feeds the IF resulting signal to the IF module.

Diplexer

The Diplexer separates the transmit and receive signals at the RF antenna port.

DC/DC Converter

The DC/DC Converter provides the DC/DC conversion to generate the secondary voltages from the remote supply voltage. It interfaces with all active modules of the transceiver.

All rights reserved. Passing on and copying of this document, use and communication of its contents not permitted without written authorization from Alcatel.

All rights reserved. Passing on and copying of this document, use and communication of its contents not permitted without written authorization from Alcatel.

4–1.5 Radio Transmission features

This paragraph describes the Radio Transmission features:

– **Frequency Agility** herebelow
– **Transmitted power control: ATPC function** herebelow
– **Transmitted power control: RTPC function** on page 194
– **Internal service channel** on page 195
– **User service channels** on page 196

4–1.5.1 Frequency Agility

The Frequency Agility feature gives the Operator the possibility to set via ECT the frequency of a single Transceiver within a chosen sub–band to select the RF working channel. This implies benefits for spare parts, order processing and frequency co–ordination.

4–1.5.2 Transmitted power control: ATPC function

The automatic control of the transmitted power (ATPC) function allows to regulate the transmitted power in order to supply a reduced power in situation of normal propagation and the maximum power in conditions of fading.

In radio link systems the ATPC device is considered a very important function taking into account the following advantages:

– reduction of the internal interferences of the radio system and with other systems

– reduction of the average consumption of the transmitter considering that the maximum power is supplied for small percentage of time

– improvement of the average condition of the transmitter about the linearity and consequent reduction of phenomena of background error due to non linear distortion that with ATPC could be revealed only in conditions of fading

– possibility to increase the System Gain as a consequence to the reduction of the Back–off on the power transmitter taking into account what mentioned above

[1] ATPC Working principle

The ATPC system is based on a control loop of the transmitted power between a transmitter and a receiver connected in a radio link.

With reference to the Fig. 73. on page 193 the receiver in Station B furnishes through the AGC voltage the information of the received power to the ATPC controller; the received power level is set to the local IDU by the IDU–ODU service channel and then transferred to the remote station (in the IDU the power level is extracted by the PDH frame and sent to the ODU, where the ATPC controller is resident, by IDU–ODU dialogue). In the remote station (A) the ATPC controller compares the voltage with threshold values (pre–settable in the embedded ODU SW) and according to the obtained result it orders to increase/decrease the transmitted power. These orders are processed and therefore transferred to the associated transmitter.

In the protected configurations the control information of the transmitted power are 1+1 protected transmitted.

The information regarding the ATPC functionality can be summarized as follows (for each channel):

- received power (absolute digital value to be transmitted towards the remote station in order to move the Tx output power).
- Rx failure (for remote Tx inhibition). This information is transmitted instead of the received power level
- The ATPC channel is identified according to the position in the frame where the ATPC information is inserted/extracted

The information for each channel received at the remote station is sent to the relevant transmitter where the PRx information received is compared to the set thresholds and it is decided to send the up or down or hold commands to the transmitter.

The Rx failure received in the Tx remote station is used to set the Tx at **low Pout**. The failure of "Rx0 and Rx1" received in the Tx remote station is used to set them at **low Pout in** case of 1+1HSB configuration. It will be switched on after Rx failure removal.

The Rx failure alarm is not comprehensive of propagation alarms**.**

[2] Organization of the control system

The ATPC control system is repeated for each channel without any centralized function.

The system control is organized in two parts for each channel and for each direction:

- the Rx system control implementing PRx detection, eventual Rx failure detection and insertion of the above data in the service channel;
- The Tx system control implementing extraction of data from the service channel and PTx drive.

[3] ATPC threshold management

The transmitter can change the output power in the ML (max level) and mL (min level) range. The transceiver has its own default value for ML, mL and NL (nominal level).

The following values can be set through the CT:

AML (ATPC Max. Level) where AML <= ML

AmL (ATPC min. Level) where AmL >= mL

With the constraints mL <= AmL <= NL

mL <= AML <= ML

It means that:

- the ATPC range is not fixed but is variable according to the values set for AML and AmL
- the max ATPC output power can differ from the max output power of the transmitter and the ATPC functionality can be maintained with reduced range

Every power change, from manual to automatic and vice–versa, is performed at the speed of 1dB /10ms.

A 3 dB "POWER HOLD" hysteresis range has been defined between the "POWER UP" and the "POWER DOWN" threshold levels.

All rights reserved. Passing on and copying of this document, use and communication of its contents not permitted without written authorization from Alcatel.

All rights reserved. Passing on and copying of this document, use and communication of its contents not permitted without written authorization from Alcatel.

In case of loss of Tx_Rx ATPC signal, exchanged between Tx and Rx, the output power is frozen and an ATPC loop alarm must be activated (no other actions are taken); when the communication is restored the ATPC loop alarm is deactivated after an hysteresis to be defined.

The ATPC function can be both enabled or disabled: when ATPC is disabled the output power can be driven normally.

An ”identifier station code” is used in the remote station to be sure that an Rx power decrease of one receiver corresponds to a PTx increase of the relevant Tx one.

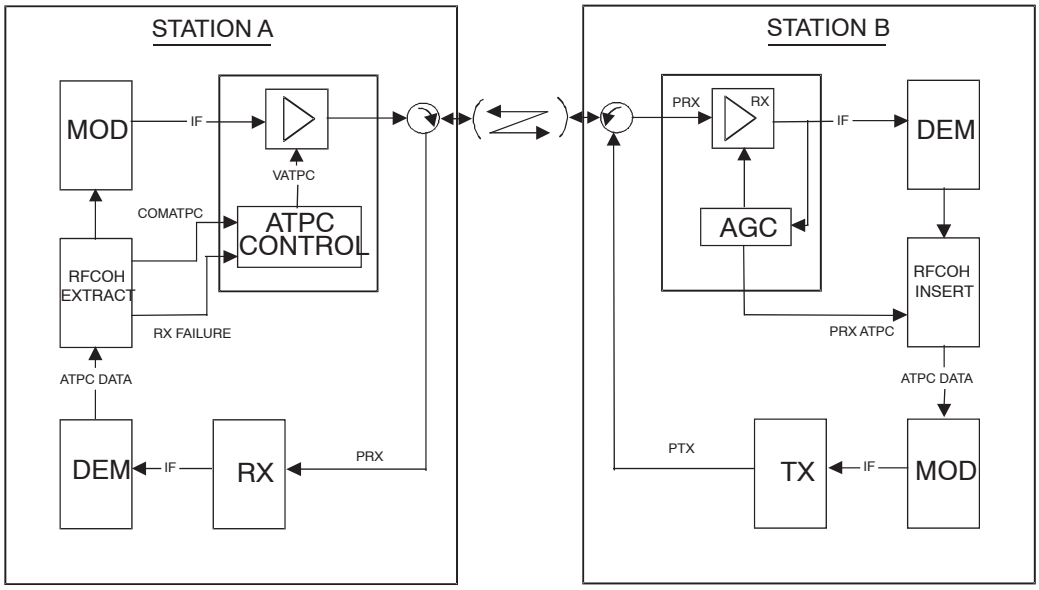

NOTE: ATPC REGULATION SHOWN IN ONE DIRECTION OF TRANSMISSION ONLY AND VALID FOR EACH CHANNEL

Fig. 73. ATPC functionality

[4] ATPC in HSB configuration

Fig. 74. on page 194 shows all possible system states and actions carried out, according to the following legend:

A	=	PRx > –30dBm
E	=	PRx < Extra power threshold
N	=	PRx within A and S or within A and E according to cases
HOLD	=	The current output power value is maintained
LOWER	=	The output power value is ruled by the lowest PRx of the pair
HIGHER	=	The output power value is ruled by the greatest PRx of the pair

Whenever one PRx is not considered valid (because it is not received, or there is a Card_Fail, or it is squelched, ..), the output power value is ruled by the only valid PRx.

Should both PRx be not valid, system stays in the HOLD condition.

PRx–0 state →	A	N	E	PRx–1 state ↓
	HIGHER	HOLD	HIGHER	A
	HOLD	LOWER	LOWER	N
	HIGHER	LOWER	LOWER	E

Fig. 74. ATPC in HSB configuration

4–1.5.3 Transmitted power control: RTPC function

The capability to adjust the transmitted power in a static and fixed way (RTPC = Remote Transmit Power Control) has been introduced for those countries where, due to internal rules, the ATPC function is not accepted or for those hops in which due to the short length and interface problems, a fixed reduced transmitted power is preferred. The range of the possible attenuation depends on the frequency band involved. The setting of the transmitted power can be performed locally through ECT.

All rights reserved. Passing on and copying of this document, use and communication of its contents not permitted without written authorization from Alcatel.

All rights reserved. Passing on and copying of this document, use and communication of its contents not permitted without written authorization from Alcatel.

4–1.5.4 Internal service channel

The system to transmit **CLA**, **RDI** and **ATPC** information uses a 64 kbit/s service channel inserted in the radio aggregate frame.

– **CLA** (not operative in current release)

CLA (Common Loss Alarms) is a mechanism, used only in 1+1 hot standby configurations, which detects local failures of the transmitter (“Silent alarms“) normally not detected by the conventional Tx–Rx alarms.

– **RDI**

RDI (Remote Defect Indication) is a 1–bit alarm transmitted from the remote system to the local one, even if the NMS–RF bi–directional channel is not working / not present.

RDI is generated by the remote EC as the sum of the various card failures of the remote system.

The RDI information is available on the Main unit (channel 1) front panel through LEDs.

In 1+0 configuration RDI is the sum in the remote station of the following roots:
- Rx Muldem Failure
- Loss of Signal from Tributaries
- ODU transmitted/received power alarm (Tx Fail / Rx Fail)
- ODU incompatible Tx power alarm
- Common Loss Alarm
- ODU Rx failure (Fail_Rx_ODU)

In 1+1 configuration RDI is the sum in the remote station of the following roots:
- Main and/or Spare Rx failure
- Tx failure in Main or Spare Board
- Main/Spare card missing
- Loss of Signal from Tributaries
- Loss of cable from one of the two ODUs
- EPS Tx/Rx failure
- Fan Unit card fail/missing
- ODUs transmitted/received power alarm (Tx Fail / Rx Fail)
- ODUs incompatible Tx frequency/power alarm
- Common Loss Alarm
- ODUs Rx failure (Fail_Rx_ODU)
- Tx failure in one of the two IDU

– **ATPC**

The ATPC (Automatic Transmit Power Control) function allows to regulate the transmitted power in order to supply reduced power in normal propagation conditions, and maximum power in fading conditions.

4–1.5.5 User service channels

Two service channels are available.

a) Service Channel 1 (data channel)

This channel can be used in one of the following modes (settable by CT):

- 64 kbit/s V.11 co–directional
- 64 kbit/s G.703 co–directional
- 64 kbit/s V.11 contra–directional

b) Service Channel 2 (Engineering Order Wire)

EOW is a telephone channel with the possibility of implementing general or selective call. The handset is connected to a connector on the front panel of the IDU Access unit. To implement a selective call the CT/OS must assign a station number (between 10 and 99) to each terminal during the installation phase. Number 00 is for the general call (omnibus call). Two terminals in the network should not have the same station number.

A PSK (Portable Service Kit) can be connected to the ODU to allow the technicians during the installation/maintenance to establish service communications with the operators in the local station or in the remote station.

Three ways of calling are possible:

- SELECTIVE: a connection between two stations
- OMNIBUS: a unidirectional connection between one station and all the others
- MULTI–SELECTIVE: a connection between one and more stations (max three users)

The numbers available for calls are from 10 to 99.

The omnibus call number is identified by number 00.

Fig. 75. on page 197 shows the block diagram of the EOW channel in 1+0 configuration.
Fig. 76. on page 198 shows the block diagram of the EOW channel in 1+1 configuration (K_SWRx is the EPS–Rx Switch command).

For operative details refer to chapter 3–2 on page 133.

All rights reserved. Passing on and copying of this document, use and communication of its contents not permitted without written authorization from Alcatel.

All rights reserved. Passing on and copying of this document, use and communication of its contents not permitted without written authorization from Alcatel.

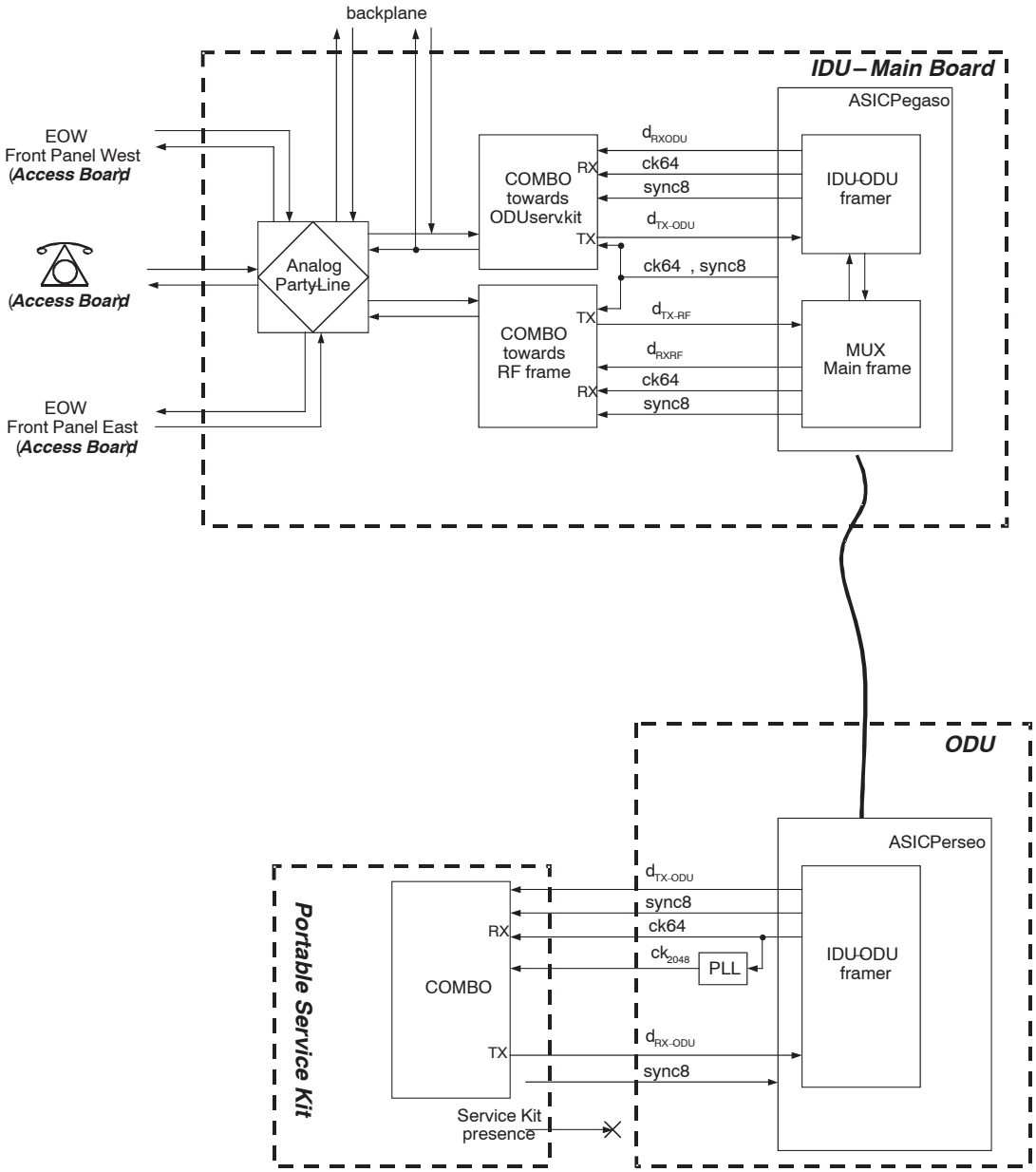

Fig. 75. EOW channel block diagram in 1+0 configuration

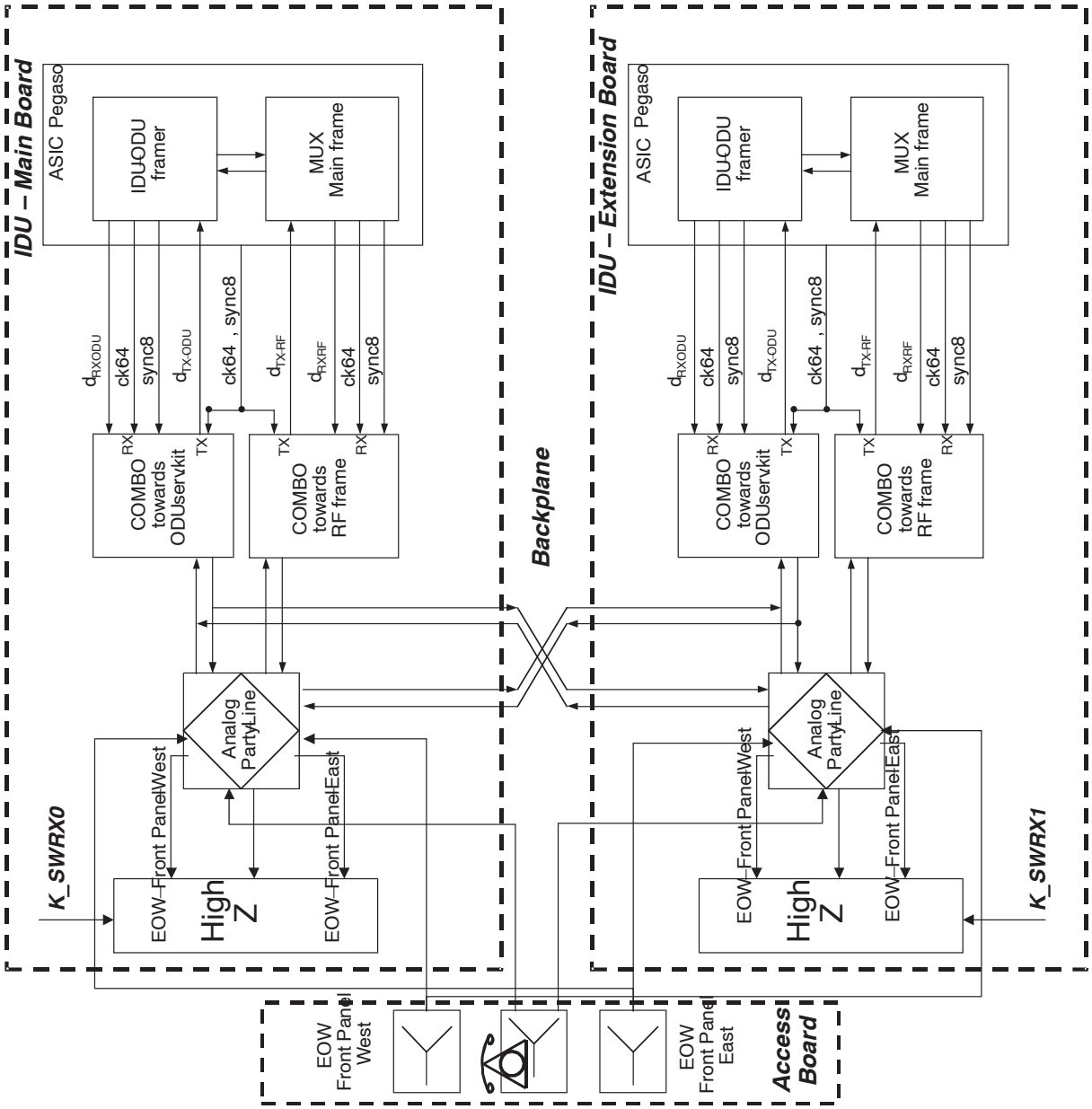

Fig. 76. EOW channel block diagram in 1+1 configuration

All rights reserved. Passing on and copying of this document, use and communication of its contents not permitted without written authorization from Alcatel.

All rights reserved. Passing on and copying of this document, use and communication of its contents not permitted without written authorization from Alcatel.

4–1.6 Protection schemes

The Protection schemes are implemented in Tx side and in Rx side.

4–1.6.1 Tx protection schemes

4–1.6.1.1 Tx EPS protection

This protection scheme is controlled by the equipment fault criteria. The Tx switching logic is implemented in the “LOG_EPS” block placed on the Main and Extension units.
The same signal coming from the user access is present at the input splitters SP1 and SP0; the output of each splitter is sent to both switches Tx_SW1 and Tx_SW0; these switches are track–controlled (with commands K_SWT1 and K–SWT0) in order to send to the two ODUs the same signal coming from the same IDU unit.

The switching criteria have the same priority and are:
- ALM_MUX_Tx1
- ALM_MUX_Tx0
- MULDEM 1 Card fail
- MULDEM 0 Card fail
- MULDEM 1 Missing
- MULDEM 0 Missing
- SW fail 1
- SW fail 0
- Clock fail 1
- Clock fail 1

The following alarms are exchanged between the boards via backplane:
- ALM_Mux_Tx: OR of the various alarms coming from the Tx section (Line interface Tx–side, Mux, scrambler, RS–coder, Up–sampling, 614 kbit/s insertion)
- Card missing and Card fail of the Muldem board

The output of each LOG_EPS block controls its own EPS–Tx switch.

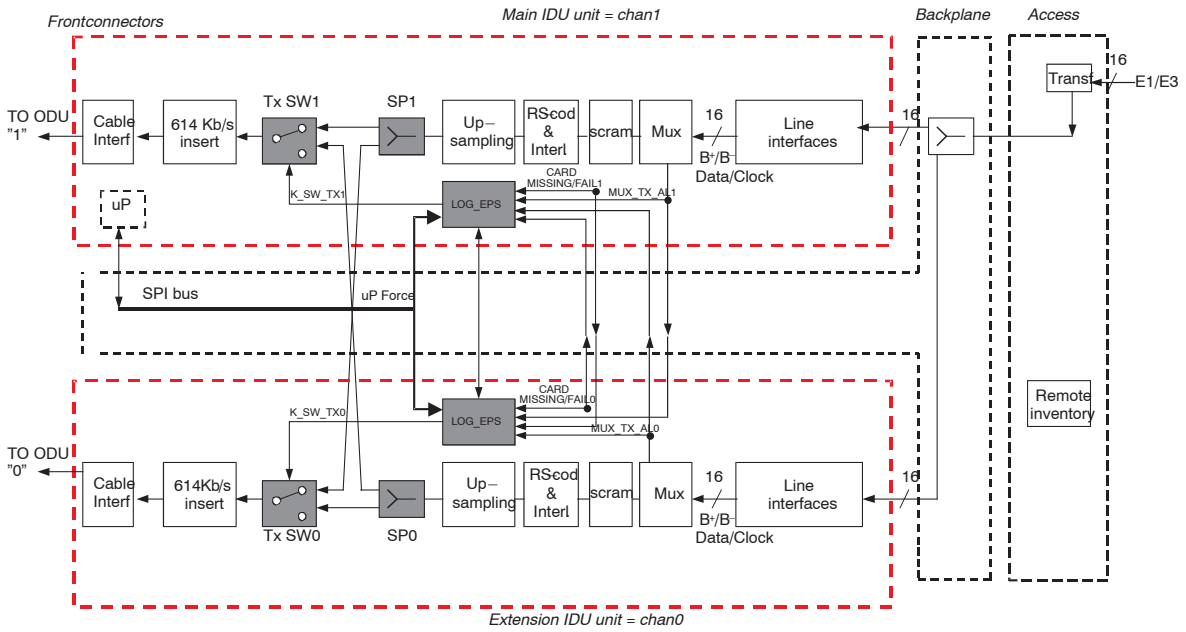

Fig. 77. Switch EPS–Tx detail

The operator can modify with the CT the state of the switch through the commands listed in Tab. 59.

Tab. 59. EPS–Tx switch priority table

Description	Priority	Action
Lockout	1	When activated the main channel is used
Force Switch	2	When activated the spare channel is used
Automatic Switch	3	Normal operating condition
Manual Switch	4	

4–1.6.1.2 Hot Stand–by protection

The Hot Stand–by protection has been implemented by the squelch of the RF transmitter: one transmitter is connected to the antenna (active), the other transmitter is squelched (stand–by).

The squelch command is sent from IDU to ODU.

The default working mode is “Revertive Mode”: the Main ODU is always connected to the antenna. The “Not Revertive Mode” can be optionally selected: the first transmitter to be efficient is the one selected in the antenna (disregarding the attribute of Main or Spare).

The switching criteria are:
- ALM_Tx 1 (from ODU 1)
- ALM_Tx 0 (from ODU 0)
- Cable loss 1 (no channel 1 IDU–ODU cable)
- Cable loss 0 (no channel 0 IDU–ODU cable)
- MULDEM 1 Card fail
- MULDEM 0 Card fail
- MULDEM 1 Missing
- MULDEM 0 Missing

These criteria have the same priority; the logic will protect the first incoming one. If both transmitters have an active alarm, the logic does not switch and at the antenna is still connected the last transmitter that has failed (or Transmitter 1 if the protection scheme is Revertive).

The operator can modify with the CT the state of the switch through the commands listed in Tab. 60. :

Tab. 60. Hot Stand–by switch priority table

Description	Priority	Action
Lockout	1	When activated the main channel is used
Force Switch	2	When activated the spare channel is used
Automatic Switch	3	Normal operating condition
Manual Switch	4	

N.B. In 1+1 FD configuration the RF transmitter is squelched only if a failure in the Tx section of the ODU is detected.

All rights reserved. Passing on and copying of this document, use and communication of its contents not permitted without written authorization from Alcatel.

All rights reserved. Passing on and copying of this document, use and communication of its contents not permitted without written authorization from Alcatel.

4–1.6.2 Rx protection schemes

4–1.6.2.1 Rx EPS protection

This protection scheme is controlled by the equipment fault criteria. The Rx switching logic is implemented in the “LOG_EPS” block placed on the Main and Extension units.

The output switches Rx_SW1 and Rx_SW0 are kept in the suitable position in order to have at the output the signal taken from the better path.

The EPS switching criteria coming from the channels are processed in the LOG_EPS block in order to put into service the better operating channel by closing Rx_SW1 and by opening Rx_SW0 to put into service channel 1 or by closing Rx_SW0 and by opening Rx_SW1 to put into service channel 0.

Every block (LOG_EPS0 and LOG_EPS1) can correctly drive switches Rx_SW1 and Rx_SW0 even if a block is missing.

The uP sends the command to both LOG_EPS blocks to choose the channel in service according to the Operator commands.

The switching criteria are:

- CH FAIL 1 (OR of HBER 1 and LOF_RPS 1)
- CH FAIL 0 (OR of HBER 0 and LOF_RPS 0)
- IDU–ODU cable loss 1
- IDU–ODU cable loss 1
- FAIL ODU 1
- FAIL ODU 0
- FAIL EPS1 (LOF DEMUX 1 + DEMUX 1 failure)
- FAIL EPS0 (LOF DEMUX 0 + DEMUX 0 failure)
- MULDEM 1 Card fail
- MULDEM 0 Card fail
- MULDEM 1 Missing
- MULDEM 0 Missing
- SW fail 1
- SW fail 0

Alarms MULDEM 0 (or 1) Missing, MULDEM 0 (or 1) Card fail and Sw fail 0 (or 1) have the same priority: when they are incoming, the logic closes Rx_SW1 (or Rx_SW0) thus changing the system to the 1+0 configuration.

Alarms CH FAIL 0 (or 1) have a lower priority than the above alarms: when they are incoming, the logic puts into service channel 1 (or 0) if there are no higher priority criteria active.

When an alarm with the same priority is active on both channels, the logic does not change the switch situation.

Note: The Revertive/Not Revertive configuration is activated at the same time on the EPS_Tx and EPS_Rx.

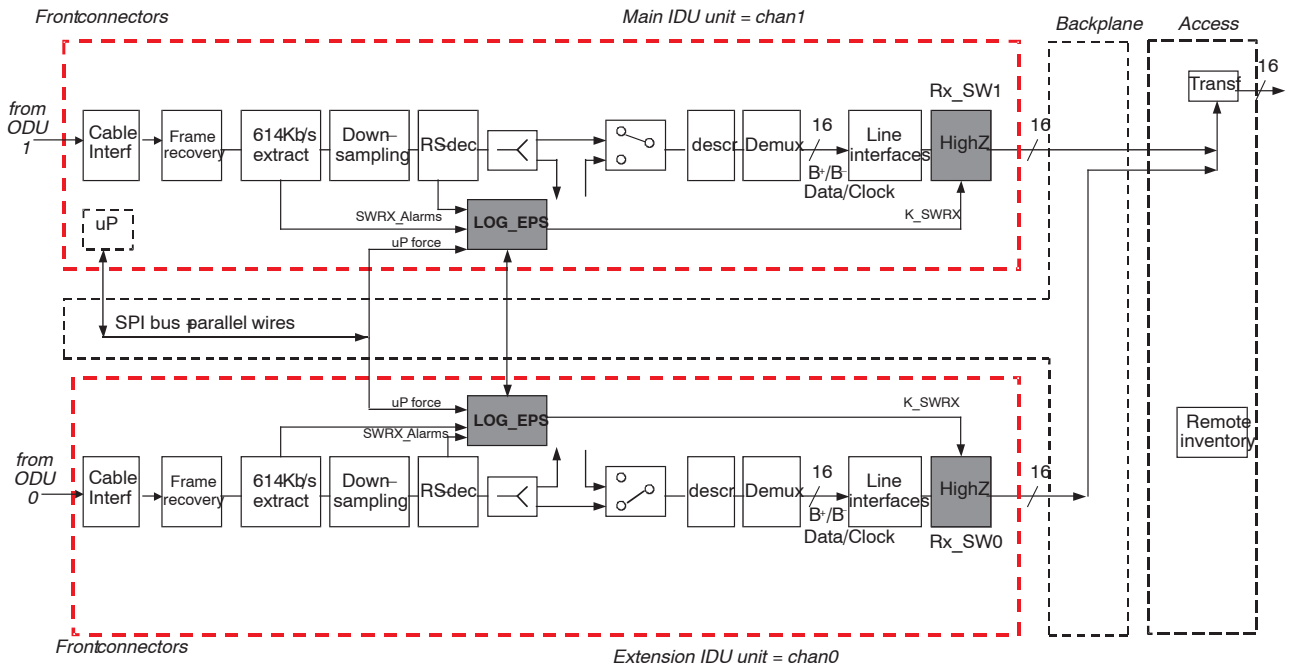

Fig. 78. EPS–Rx Switching logic on Main and Spare boards

Tab. 61. EPS–Rx switch priority table

Description	Priority	Action
Lockout SW Rx	1	When activated the main channel is used
Force Switch SW Rx	2	When activated the spare channel is used
Automatic Switch SW Rx	3	Normal operating condition
Manual Switch SW Rx	4	Switch in absence of alarms

4–1.6.3 User service channel protection

In 1+1 configuration the user service channels (64 kbit/s channel and EOW channel) are also protected.

These service channels are connected to the Access unit front panel and therefore the strategy used is similar to the one used for main tributaries: each muldem board has its own electrical interface (V.11, G.703, Combo, etc.) plus a ”High Z” device; the two outputs are connected at backpanel level.

All rights reserved. Passing on and copying of this document, use and communication of its contents not permitted without written authorization from Alcatel.

All rights reserved. Passing on and copying of this document, use and communication of its contents not permitted without written authorization from Alcatel.

4–1.7 Loopbacks

Five loopbacks can be performed at different levels.

– 2 near end and 1 far end loopbacks are embedded in the IDU

– 2 near end loopbacks are embedded in the ODU.

Some loopbacks are declared *local only*; this means that, when the NE receives a loopback request, the NE executes the request only if it is arriving from the local ECT. This restriction has been introduced to avoid the risk of a permanent disconnection from the NMS of a remote NE.

4–1.7.1 IDU loopbacks

[1] Near end IDU cable loopback – internal – *local only*

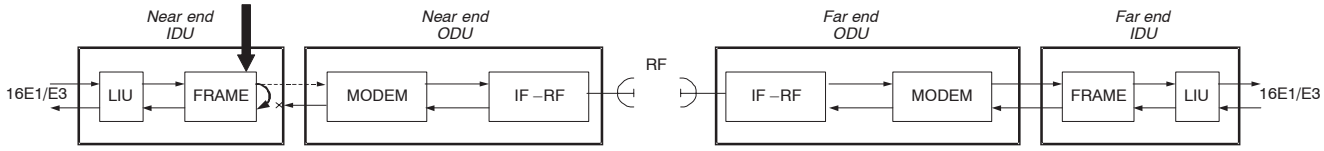

Fig. 79. Near end IDU cable loopback

[2] Far end IDU tributary loopback – internal

This loop can be activated separately on each tributary (example: in 16 E1 mode the *i*–th trib. can be looped independently from the others).

Assuming that an ECT is connected to the *station A*, the NE A uses the *dedicated link connection* to activate/deactivate this loop on the remote *station B*. In this way, from *station A*, it is possible to activate/deactivate this loop without accessing the NE B through a RECT.

It is not forbidden (even if not considered here) to use a RECT from *station B* to activate this loop.

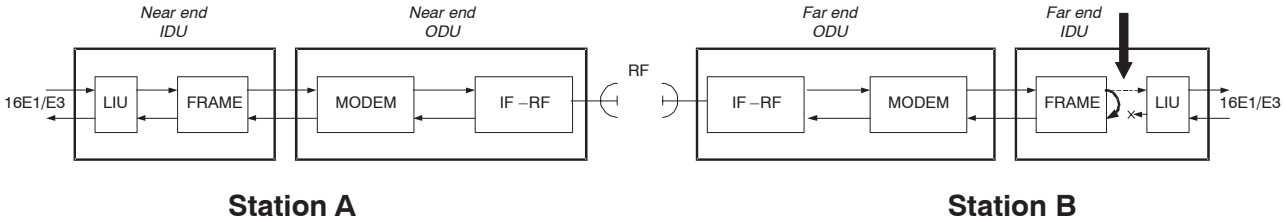

Fig. 80. Far end IDU tributary loopback

[3] Near end tributary loopback – line

It can be activated separately on each tributary (example: in 16 E1 mode the *i*–th trib. can be looped independently from the others).

It is not forbidden (even if not considered here) to use a RECT from *station B* to activate this loop.

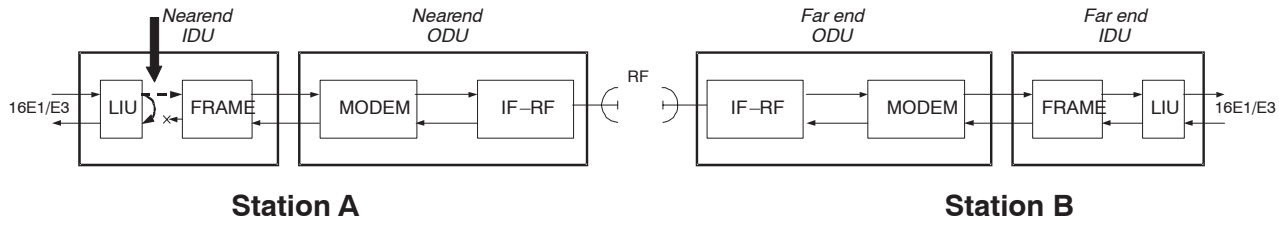

Fig. 81. Near end tributary loopback

4–1.7.2 IDU loopbacks

[1] Near end ODU cable loopback – internal – *local only*

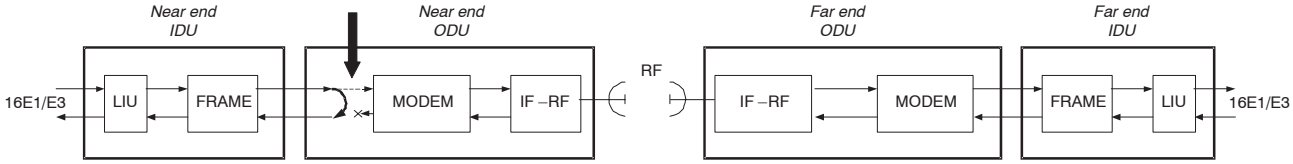

Fig. 82. Near end ODU cable loopback

It is executed by the NE only if it sent by the local ECT.

[2] Near end RF loopback – internal – *local only*

Taking into account the HW implementation of the RF loopback, it is not necessary to switch off the remote transmitter during a local RF loopback.

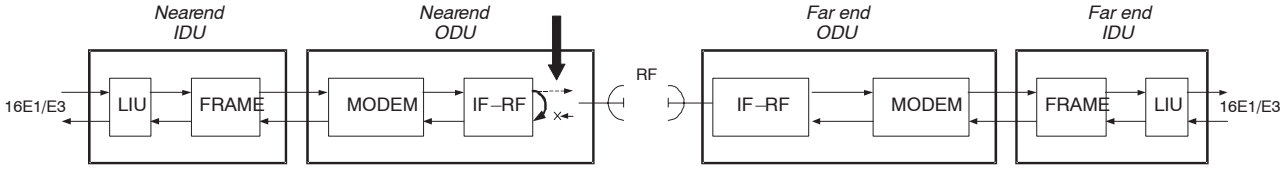

Fig. 83. Near end RF loopback

All rights reserved. Passing on and copying of this document, use and communication of its contents not permitted without written authorization from Alcatel.

All rights reserved. Passing on and copying of this document, use and communication of its contents not permitted without written authorization from Alcatel.

The RF loopback is executed by the NE only by the local ECT.

The main principle is described below:

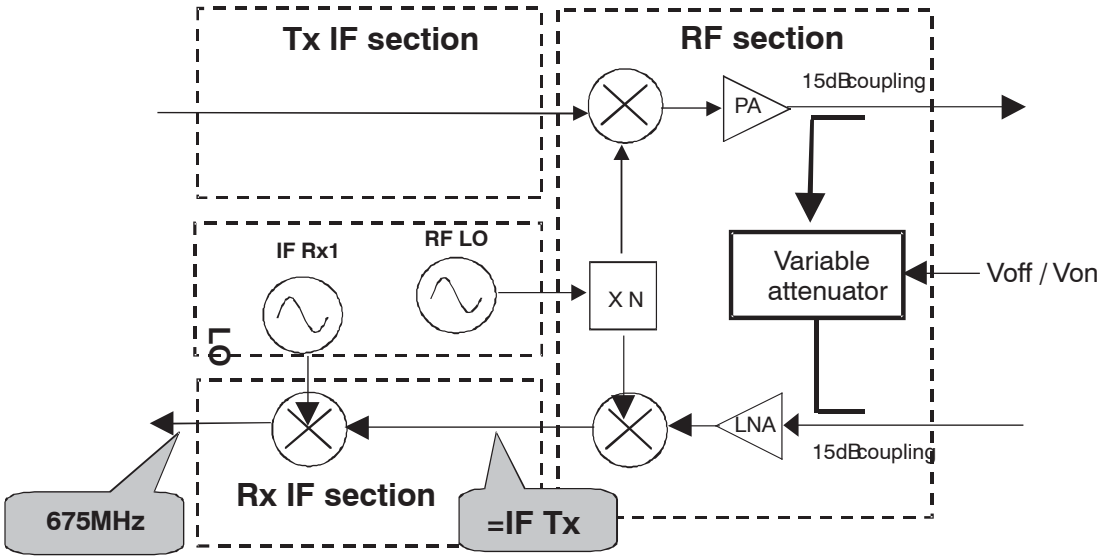

Fig. 84. RF loopback scheme

- At the output of the RF section, a part of the Tx signal is taken and applied to the Rx chain through a variable attenuator and couplers. After Rx down conversion, the frequency of the recovered IF signal is equal to the frequency of IF Tx signal. The IF Rx1 synthesizer (on the LO section) is then converted to the right frequency to recover 675 MHz signal after the second down conversion.
- The RF loopback is activated when “Von” is applied to the variable attenuator. Otherwise, “Voff” setting guarantees a good Tx/Rx isolation.
- The RF loopback feature is guaranteed from nominal output power down to 10 dB under the nominal output power.

The signal that is sent after the loopbacks is the same signal that had been received (loop and continue).

4–1.8 Network management and interworking

The Alcatel 9400 Terminal features very advanced supervisory functions, which are optimized for operation and maintenance, offering solutions from very small to very large networks in an evolutionary path:

- for local management of a single link (local and remote equipment), an F interface to a craft terminal (ECT) is provided, allowing diagnostic and configuration of the network elements through a user friendly man–machine interface (Windows_ environment),
- for small to medium sized networks, from isolated hops up to networks composed of a maximum 128 equipment, based on RECT
- for more complex networks composed of numerous links integrated in a transport network a global solution is proposed, operating with one or more Operation Systems on workstations, with network management capabilities in fault locations, performance measurements, configuration and security management.

The network management protocol used is SNMP(Simple Network Management Protocol):

ALCATEL proposes a concept of NMS to manage the 9400 AWY Indoor–Outdoor equipment, using a hierarchical management structure (Management Information Base MIB) based on the Simple Network Management Protocol (SNMP).

The ALCATEL 9400 AWY –series SNMP Terminals produce the following main advantages:

- Open protocol:
  It provides a standardized open protocol; its management interface allowing management by other OS vendors or integration in Alcatel TMN through a TCP–IP data communication network.

- Re–routing capability :
  It benefits of the TCP–IP re–routing capability even in the stand–alone management solution.
  This means that the Supervision Bus can be looped or meshed (and it is recommended to do so when possible) via NMS interfaces, using a dedicated Service Channel of the Transmission Equipment or external leased lines (synchronous RS485/V11 at 64 Kbit/s) or using a time slot of E1 tributary.

4–1.8.1 Local monitoring

The local craft terminal (ECT) allows to access different domains, i.e.:
- Configuration
- Diagnosis
- Equipment
- External points
- Line interface
- Performance
- Radio
- Protection Schemes
- Loopback
- Software Download

Domain accessibility is based on the operator's profiles
Administrator /Constructor: Full
Operator: Read only or full
Viewer: Read only

To facilitate the system configuration to the operator, a Wizard tool is used; this tool can be activated from the menu bar.

All rights reserved. Passing on and copying of this document, use and communication of its contents not permitted without written authorization from Alcatel.

All rights reserved. Passing on and copying of this document, use and communication of its contents not permitted without written authorization from Alcatel.

4–1.8.2 Small/medium sized networks: RECT

For networks up to 128 Network Elements (called cluster), a stand–alone solution based on RECT functionality is available. It allows to access the remote NE, display the global synthesis view as well as the NE view of each equipment of the cluster.
All applications available in the local management chapter are available for each Network Element of the Cluster
The view indicates:

- the possibility of having a map composed of up to 128 NE
- that this view is available for each NE , each sub–map and each map
- that for each selected NE (on the left) there is the indication on the right of how many alarm are active (2 Major, 2 Minor, 1 Warning); the status of the single NE (Major alarm) is propagated to the superior Sub–map up to map.
- the possibility of executing the ”Log in” command to further zoom inside the NE

4–1.8.3 Large mixed network: TMN

For large/mixed networks composed of 9400 AWY SNMP terminals, associated with other types of equipment, 2 types of application are proposed:

- The first application is the one allowing the Customer, who wants to have a multi–vendor environment at the Network Element level, to homogenize the NE interface, whoever the equipment provider might be.
- The second application is the one where the NMS is fully provided by ALCATEL. The 9400 AWY SNMP terminals will be managed by the ALCATEL Operation System 1353SH together with other type of NE’s (SDH radios, ADM) even if they are using different protocols as Q3 .
  The 1353SH provides real time monitoring and controls of all Network Elements entering in the configuration of the managed network.

The following picture illustrates the two applications proposed for the management of the ALCATEL 9400 AWY/SNMP equipment.

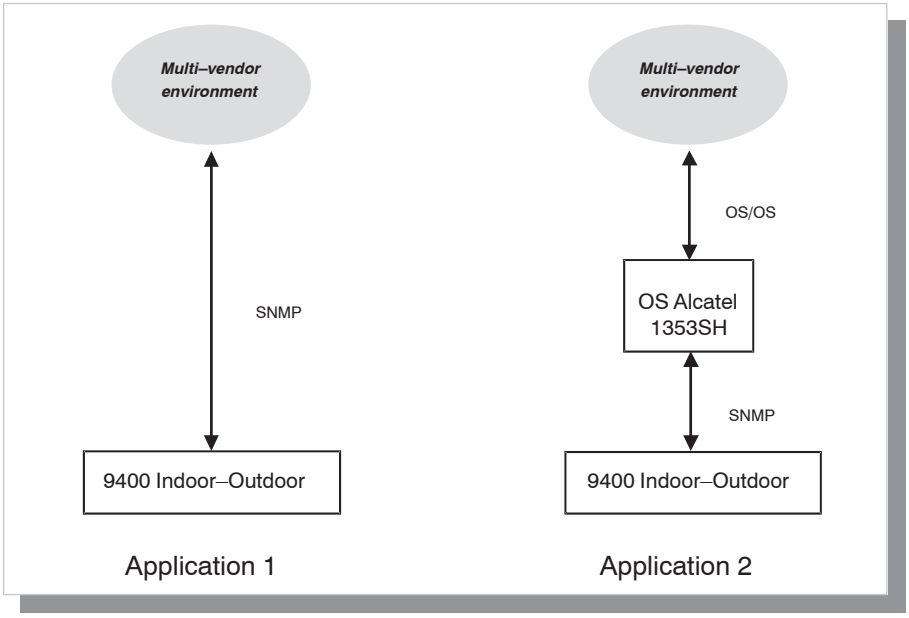

Fig. 85. TMN with SNMP

4–1.8.4 1353 SH operation system

The 1353SH Operation System provides the Network Element Management Functions according to ITU–T M3010 functional areas, as the :

- Configuration management.
- Alarm and Control management.
- Performance management.
- Security management.

and the System Functions, as the :

- Database management.
- System Backup and Restore.
- Process and software management.
- Start–up and stop.
- Filter on research.
- Graphical User Interface.

The Alcatel 9400 AWY system features a leading concept of network management, using either an SNMP agent over TCP/IP.

With SNMP, the NE can be placed in a multi–vendor environment and managed by both Alcatel 1300 equipment or other NMS providers.

Whatever the size of the network, appropriate solutions can be carried out on an evolution path. Stand–alone solutions may rely solely on the integrated management platform in the 9400 AWY. This allows reporting alarms, initiating controls and gathering performance information via a craft terminal. This user–friendly management system requires only a PC in a Windows(TM) environment. Each 9400 AWY terminal is able to support remote craft functionality independently or in cooperation with a master NMS.

Interoperability with other Alcatel urban radios at the user interface level and at the network management level is guaranteed, as well as with other Alcatel transmission products.

All rights reserved. Passing on and copying of this document, use and communication of its contents not permitted without written authorization from Alcatel.

All rights reserved. Passing on and copying of this document, use and communication of its contents not permitted without written authorization from Alcatel.

4–1.8.5 Use of NMS channels

The NMS channels are three 64 kbit/s channels, used for supervisory purposes. These channels use the IP/PPP protocol.

Two NMS channels (NMS–V11 and NMS–G703) are used to connect other equipment in the same station. Another NMS channel (NMS–RF) is used to connect another equipment in the radio remote station.

4–1.8.5.1 NMS–V11 and NMS–G703 channels

Through these two channels the NE can exchange NMS management messages towards:

- other 9400AWY NEs;
- a router towards the OS;
- Melodie NEs. In this case only TCP/IP transport is offered to the Melodie NEs.

The **NMS_V11 channel** is a 64 kbit/s; its working mode can be selected between:

- DTE: ”data in” and ”data out” must be synchronous, data out being the slave,
- Asynchronous: Tx and Rx are totally asynchronous (this mode includes DCE behavior).

The **NMS_G703 channel** is a 64 kbit/s; its working mode can be selected between:

- DTE: *G703 data in* and *G703 data out* have to be synchronous, *G703 data out* being the slave,
- asynchronous: *G703 data in* and *G703 data out* are totally asynchronous (this mode includes DCE behavior),
- ”In–frame”: this configuration both disables the NMS_G703 interface and enables the insertion/extraction into/from the first E1 of the 64Kbit/s channel coming–from/towards the uP. The insertion/extraction is relative to the first slot of the first tributary even if there is the possibility in the IDU ASIC to configure the desired slot. This setting is not applicable with unframed E1.

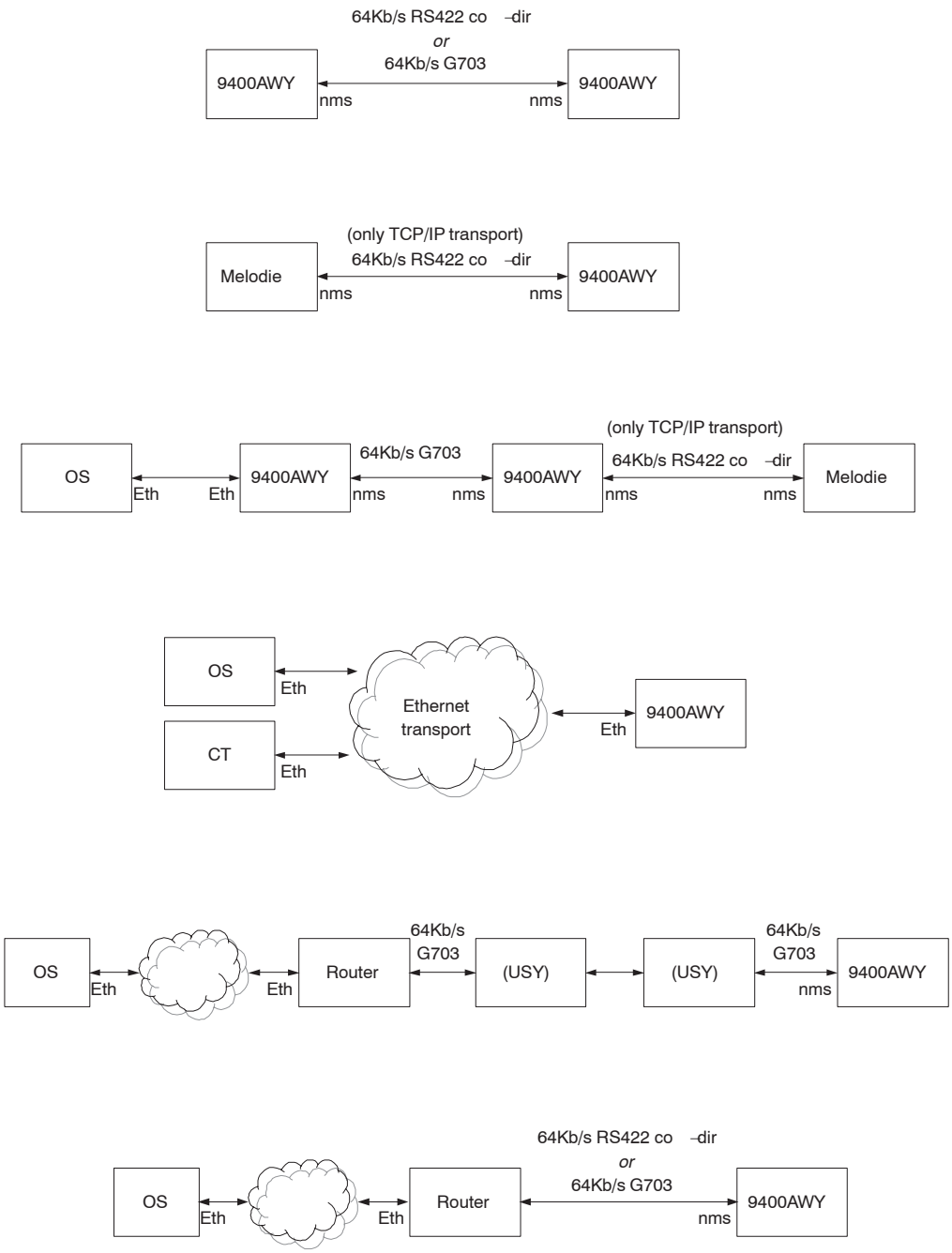

Fig. 86. Possible NMS connections

N.B. Another possibility, not shown in the above figure, is the NMS channel transported in a timeslot of a 2 Mbit/s tributary signal, while the NMS–G703 interface is disabled.

All rights reserved. Passing on and copying of this document, use and communication of its contents not permitted without written authorization from Alcatel.

All rights reserved. Passing on and copying of this document, use and communication of its contents not permitted without written authorization from Alcatel.

4–1.8.5.2 NMS–RF channel

The NMS–RF channel is a communication channel inserted in a 64 kbit/s channel of the radio aggregate frame. The channel uses the IP/ PPP protocol.

Through the NMS–RF channel the NE can exchange management messages with a remote OS (or Remote Craft Terminal).

Refer to the following figure, describing two *adjacent RF* NE (*a* and *b*) directly connected with one *NMS–RF* channel: there is a dedicated *link* connection between NE *a* and NE *b*. ”Dedicated *link* connection” means that each NE knows the IP address of the *adjacent RF* NE (i.e.: NE *a* knows the IP address of NE *b* and viceversa).

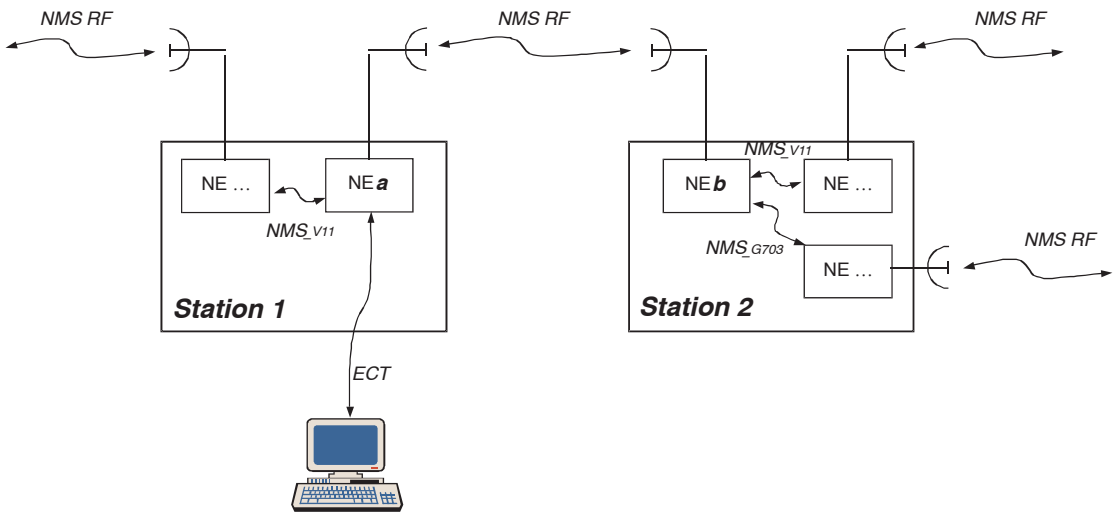

Fig. 87. Station connected by the NMS–RF channel

All rights reserved. Passing on and copying of this document, use and communication of its contents not permitted without written authorization from Alcatel.

All rights reserved. Passing on and copying of this document, use and communication of its contents not permitted without written authorization from Alcatel.

4–2 ALARMS

This chapter describes the 9400AWY Rel.1.0 alarms managed in the SWP version this handbook issue refers to.

4–2.1 Alarms Provided by Item HW

Legend:

- SA = always Service Affecting
- SAac = Service Affecting when the alarm is present on the active channel, Not Service Affecting when it is present on the stand–by channel
- NSA = always Not Service Affecting

4–2.1.1 IDU Alarms

Equipment Type	Equipment Expected	Alarm Description	Service Affecting Evaluation 1+0	Service Affecting Evaluation 1+1
Units available in V1.0.0: – Main Unit ±48/±60 V Range Supply – Extension Unit ±48/±60 V Range Supply Units envisaged but unavailable: – (Main Unit Full Range Supply) – (Extension Unit Full Range Supply)	M4860 E4860 (M2460) (E2460)	Cable Loss IDU	SA	SAac (**nb 6**)
		Card Fail	SA	SAac (**nb 5**)
		Card Missing (**nb 2**)	SA	SAac (**nb 5**)
		Equipment Mismatch	SA	SAac (**nb 5**)
		DS3 RDI egressing (Rx side) (**nb 1**)	NSA	NSA
		DS3 RDI ingressing (Tx side) (**nb 1**)	NSA	NSA
		E1 RDI egressing (Rx side) (**nb 1**)	NSA	NSA
		E1 RDI ingressing (Tx side) (**nb 1**)	NSA	NSA
		High BER	SA	SAac (**nb 6**)
		Link Identifier Mismatch	SA	(nb 3)
		Loss of Frame of PDH tributary ingressing (Tx side) (**nb 1**)	SA	(**nb 3**)
		Loss of Frame of PDH tributary egressing (Rx side) (**nb 1**)	SA	SA
		Loss of Frame of PDH signal Radio side	SA	SAac (**nb 6**)
		Loss of Signal of PDH tributary	SA	SA
		Loss of 64kbit/s G.703/V11 Codirectional Auxiliary Signal	NSA	NSA
		Loss of 64kbit/s G.703 NMS Signal (DTE and Asynchronous mode only)	NSA	NSA
		Low BER	NSA	NSA
		PDH–AIS egressing (Rx side)	SA	SA
		PDH–AIS ingressing (Tx side)	SA	(nb **3**)
		TCA on Hop Section	SA	SAac (**nb 6**)
		TCA on Link Section (**nb 3**)	–	SA
		UAT on Hop Section	SA	SAac (**nb 6**)
		UAT on Link Section (**nb 3**)	–	SA
		Unconfigured Equipment (**nb 2**)	NSA	NSA

All rights reserved. Passing on and copying of this document, use and communication of its contents not permitted without written authorization from Alcatel.

All rights reserved. Passing on and copying of this document, use and communication of its contents not permitted without written authorization from Alcatel.

Equipment Type	Equipment Expected	Alarm Description	Service Affecting Evaluation 1+0	Service Affecting Evaluation 1+1
Units available in V1.0.0: – Main Unit ±48/±60 V Range Supply	M4860	Lan Failure	NSA	NSA
		PPP IP Fail	NSA	NSA
Units envisaged but unavailable: – (Main Unit Full Range Supply)	(M2460)			
Access board	ACCESS	Card Missing	SA	SA
		Housekeeping Alarm	NSA	NSA
(Hitless unit) **not managed in V1.0.0**	(HSW)	Loss of Alignment	–	NSA
Fan unit	FAN	Card Fail	–	SA
		Card Missing	–	SA
IDU	IDU10 IDU11	Battery Fail or Missing	NSA	NSA
		Remote NE Failure Indication	NSA	NSA

(**nb 1**) Only in case of framed tributaries.
(**nb 2**) Only for the Extension units.
(**nb 3**) SAac in 1+1 w/o hitless configurations, SA in 1+1 with hitless configurations.
(**nb 4**) Alarms supported only in 1+1 with hitless configurations, then they are always SA.
(**nb 5**) The active channel must be referred to the following protection type: RPS in 1+1 w/o hitless configurations, EPS–Rx in 1+1 with hitless configurations.
(**nb 6**) The active channel must be referred to RPS, with or without hitless.

4–2.1.2 ODU Alarms

Equipment Type	Equipment Expected	Alarm Description	Service Affecting Evaluation		
			1+0	1+1 FD	1+1 HSB
ODU ETSI ODU ANSI	ODU–E ODU–A	ATPC Loop	NSA	NSA	NSA
		Card Fail	SA	SAac	SAac
		Demodulation Function Failure (nb **4**)	SA	SAac	SAac
		Early Warning (**nb 8**)	–	NSA	NSA
		Equipment Mismatch	SA	SAac	SAac
		Loss of Signal for the Modulation Function (**nb 2**)	SA	NSA	SAac
		Modulation Function Failure (**nb 7**)	SA	NSA	SAac
		ODU not responding (**nb 1**)	SA	SAac	SAac
		Provisioned Frequency incompatible with actual HW	SA	SAac	SAac
		Provisioned Tx Power incompatible with actual HW	NSA	NSA	NSA
		Receiving Function Failure (**nb 3**)	SA	SAac	SAac
		Software Version Mismatch	NSA	NSA	NSA
		Stand–by Software Version Mismatch	NSA	NSA	NSA
		Transmission Function Failure (**nb 5**)	SA	NSA	SAac
		Unconfigured Equipment (**nb 6**)	NSA	NSA	NSA

N.B. The active channel is referred to the RPS w/o or with hitless, except for the transmission alarms in 1+1 HSB configurations (for these alarms the active channel is referred to TPS).

(**nb 1**) This alarm represents a communication problem with the ODU (i.e. IDU–ODU cable failure, ODU missing, ODU power problem).
(**nb 2**) Loss of Signal for the Modulation Function represents the “missing of data at the cable input of the ODU”.
(**nb 3**) Receiving Function Failure represents the “received power alarm”.
(**nb 4**) Demodulation Function Failure represents the “synchronization missing at receive side alarm”.
(**nb 5**) Transmission Function Failure represents the “transmitted power alarm”.
(**nb 6**) Only for ODU Ch#0 in 1+1 configurations.
(**nb 7**) Modulation Function Failure represents the “synchronization missing at transmission side alarm”.
(**nb 8**) Only in the 1+1 configurations with Hitless Switch.

All rights reserved. Passing on and copying of this document, use and communication of its contents not permitted without written authorization from Alcatel.

All rights reserved. Passing on and copying of this document, use and communication of its contents not permitted without written authorization from Alcatel.

4–2.2 Alarm severity

The following tables provide the content of the ASAPs (Alarm Severity Assignment Profiles) predefined by SW processes. As the notification types (probable causes) included in the predefined ASAPs are configuration dependent, the “Config.” column defines the configurations in which the probable cause are included.
If no indication is provided means that the probable cause is included in all the configurations.

The severity defined in the following tables concerns the 1+1 configurations (when needed, the severity for SA and NSA is different).
As general rule the severity for 1+0 configurations is obtained using the SA severity also for the NSA one (if they are different). The only exception is the LossOfSignal probable cause, in fact in this case different severity must be used for LOS of the PDH tributaries (SA) and of the auxiliary and NMS signals (NSA).

Legend:

- Config.:
  - blank: all the 9400AWY Radio configurations (1+0, 1+1, with and without hitless)
  - RAD–HS: all the 9400AWY Radio configurations with Hitless
- NAL: Non Alarm
- MAJ: MAJor
- MIN: MINor
- WAR: WARning

4–2.2.1 Communication Alarms

NotificationType	Config.	Primary Alarms ASAP#2		No Remote Alarms ASAP#3		All Alarms ASAP#4	
		SA	NSA	SA	NSA	SA	NSA
Ais		NAL	NAL	NAL	NAL	MAJ	MIN
AtpcLoopProblem		MIN	MIN	WAR	WAR	MIN	MIN
CableLOS		MAJ	MIN	MAJ	MIN	MAJ	MIN
DemFail		MAJ	MIN	MAJ	MIN	MAJ	MIN
EarlyWarning	RAD–HS	NAL	NAL	WAR	WAR	WAR	WAR
HighBER		MIN	WAR	MIN	WAR	MIN	WAR
IncompatibleFrequency		MAJ	MIN	MAJ	MIN	MAJ	MIN
IncompatiblePTX		WAR	WAR	WAR	WAR	WAR	WAR
LinkIdentifierMismatch		MAJ	MIN	MAJ	MIN	MAJ	MIN
LossOfAlignment	RAD–HS	MIN	MIN	MIN	MIN	MIN	MIN
LossOfFrame		MAJ	MIN	MAJ	MIN	MAJ	MIN
LossOfSignal		MAJ	MIN	MAJ	MIN	MAJ	MIN
LowBER		NAL	NAL	WAR	WAR	WAR	WAR
ModLOS		MAJ	MIN	MAJ	MIN	MAJ	MIN
PPPFail		MIN	WAR0	MIN	WAR0	MIN	WAR0
RemoteDefectIndication		NAL	NAL	NAL	NAL	WAR	WAR
RxFail		MAJ	MIN	MAJ	MIN	MAJ	MIN
ThresholdCross		MAJ	MIN	MAJ	MIN	MAJ	MIN
TxFail		MAJ	MIN	MAJ	MIN	MAJ	MIN
UnavailableTime		MAJ	MIN	MAJ	MIN	MAJ	MIN

All rights reserved. Passing on and copying of this document, use and communication of its contents not permitted without written authorization from Alcatel.

All rights reserved. Passing on and copying of this document, use and communication of its contents not permitted without written authorization from Alcatel.

4–2.2.2 Equipment Alarms

NotificationType	Config.	Primary Alarms ASAP#2		No Remote Alarms ASAP#3		All Alarms ASAP#4	
		SA	NSA	SA	NSA	SA	NSA
BatteryFail		MIN	MIN	MIN	MIN	MIN	MIN
HousekeepingAlarm		WAR	WAR	MIN	MIN	MAJ	MAJ
Internal Communication Problem		MAJ	MIN	MAJ	MIN	MAJ	MIN
LanFailure		MIN	MIN	WAR	WAR	MIN	MIN
RemoteNEFailure		NAL	NAL	NAL	NAL	WAR	WAR
ReplaceableUnitMissing		MAJ	MIN	MAJ	MIN	MAJ	MIN
ReplaceableUnitProblem		MAJ	MIN	MAJ	MIN	MAJ	MIN
ReplaceableUnitTypeMismatch		MAJ	MIN	MAJ	MIN	MAJ	MIN
StandByVersionMismatch		WAR	WAR	WAR	WAR	WAR	WAR
UnconfiguredEquipment Present		WAR	WAR	WAR	WAR	WAR	WAR
VersionMismatch		MIN	MIN	MIN	MIN	MIN	MIN

All rights reserved. Passing on and copying of this document, use and communication of its contents not permitted without written authorization from Alcatel.

SECTION 5: APPENDICES

SECTION CONTENT	PAGE
Appendix A – Safety–EMC–ESD norms and equipment labelling It describes the equipment labelling and the norms mandatory or suggested that must be considered to avoid injuries on persons and/or damage to the equipment.	223
Appendix B – Documentation guide It contains all information regarding this handbook (purpose, applicability, history) and the Customer Documentation set it belongs to, in particular the list of the handbooks the Operators should have in order to carry out the required operations.	239
Appendix C – List of symbols and abbreviations	251

All rights reserved. Passing on and copying of this document, use and communication of its contents not permitted without written authorization from Alcatel.

All rights reserved. Passing on and copying of this document, use and communication of its contents not permitted without written authorization from Alcatel.

All rights reserved. Passing on and copying of this document, use and communication of its contents not permitted without written authorization from Alcatel.

APPENDIX A : SAFETY–EMC–ESD NORMS AND EQUIPMENT LABELLING

A.1 : Introduction

This appendix describes the equipment labelling and the norms mandatory or suggested (see also point **d)** on page 11) that must be considered to avoid injuries on persons and/or damage to the equipment. The stated norms apply both to the operations described in this manual and to those described in the related manuals listed in para.B.2.1 on page 243.

This chapter is organized as follows:

– **Compliance with European Norms** herebelow

– **Safety Rules** on page 224 including:

- **General Rules** on page 224
- **Labels Indicating Danger, Forbiddance, Command** on page 225
- **Dangerous Electrical Voltages** on page 226
- **Risks of Explosions** on page 227
- **Moving Mechanical Parts** on page 227
- **Heat–radiating Mechanical Parts** on page 228
- **Microwave radiations** on page 229
- **Specific safety rules in this handbook** on page 229

– **Electromagnetic Compatibility (EMC norms)** on page 230 including:

- **EMC General Norms – Installation** on page 230
- **EMC General Norms – Turn–on, Tests & Operation** on page 230
- **EMC General Norms – Maintenance** on page 230

– **Equipment protection against electrostatic discharges** on page 231

– **Suggestions, notes and cautions** on page 231

– **Labels affixed to the Equipment** on page 232 including:

- **Labels specific for the Equipment** on page 232
- **General use labels** on page 234

A.2 : Compliance with European Norms

Refer to chapter 1–2 on page 39.

A.3 : Safety Rules

A.3.1 : General Rules

- Before carrying out any installation, turn–on, tests & operation and maintenance operations carefully read the related Handbooks, in particular:
  - Installation
  - Line–Up or Commissioning
  - Maintenance chapter of the Technical Handbook
- Observe safety rules
  - When equipment is operating nobody is allowed to have access inside on the equipment parts which are protected with Cover Plate Shields removable with tools
  - In case of absolute need to have access inside, on the equipment parts when it is operating this is allowed exclusively to service personnel, where for Service Personnel or Technical assistance is meant :

    ”personnel which has adequate Technical Knowledge and experience necessary to be aware of the danger that he might find in carrying out an operation and of the necessary measurements to reduce danger to minimum for him and for others”.

    The Service Personnel can only replace the faulty units with spare parts.
    The Service Personnel is not allowed to repair: hence the access to the parts no specified is not permitted.

    The keys and/or the tools used to open doors, hinged covers to remove parts which give access to compartments in which are present high dangerous voltages must belong exclusively to the service personnel.
  - For the eventual cleaning of the external parts of the equipment, absolutely do not use any inflammable substance or substances which in some way may alter the markings, inscriptions ect.
  - It is recommended to use a slightly wet cleaning cloth.
- The Safety Rules stated in the handbook describe the operations and/or precautions to observe to safeguard service personnel during the working phases and to guarantee equipment safety, i.e., not exposing persons, animals, things to the risk of being injured/damaged.
- Whenever the safety protection features have been impaired, REMOVE POWER.
  To cut off power proceed to switch off the power supply units as well as cut off power station upstream (rack or station distribution frame).
- The safety rules described in this handbook are distinguished by the following symbol and statement:

SAFETY RULES

All rights reserved. Passing on and copying of this document, use and communication of its contents not permitted without written authorization from Alcatel.

All rights reserved. Passing on and copying of this document, use and communication of its contents not permitted without written authorization from Alcatel.

A.3.2 : Labels Indicating Danger, Forbiddance, Command

It is of utmost importance to follow the instructions printed on the labels affixed to the units and assemblies.

The labels are fully compliant with International Norms ISO 3846–1984. The symbols or statements are enclosed in geometric shapes: ISO 3864–1984.

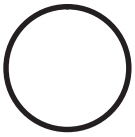

CONTAINS A SYMBOL STATEMENT

INDICATES FORBIDDANCE (WHITE BACKGROUND WHIT RED RIM–BLACK SYMBOL OR STATEMENT)

IT IS A COMMAND (BLUE BACKGROUND–WHITE SYMBOL OR STATEMENT).

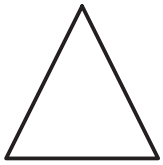

CONTAINS A SYMBOL
INDICATES WARNING OR DANGER (YELLOW BACKGROUND–BLACK SYMBOL AND RIM)

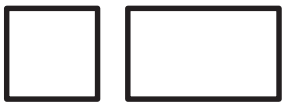

CONTAINS A STATEMENT PROVIDING INFORMATION OR INSTRUCTION.

(YELLOW BACKGROUND–BLACK STATEMENT AND RIM)

The labels have been affixed to indicate a dangerous condition. They may contain any standard–known symbol or any statement necessary to safeguard users and service personnel against the most common ones, specifically:

- dangerous electrical voltages
- harmful optical signals
- risk of explosion
- moving mechanical parts
- heat–radiating Mechanical Parts
- microwave radiations

Pay attention to the information stated in the following, and proceed as instructed

The symbols presented in para.A.3.3 through A.3.7 are all the possible symbols that could be present on Alcatel equipment, but are not all necessarily present on the equipment this handbook refers to.

A.3.3 : Dangerous Electrical Voltages

A.3.3.1: Electrical safety: Labelling

The following warning label is affixed next to dangerous voltages (>42.4 Vp; >60 Vdc).

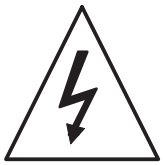

If it is a Class 1 equipment connected to mains, then the label associated to it will state that the equipment will have to be grounded before connecting it to the power supply voltage, e.g.:

WARNING !

Ground protect the equipment before connecting it to the mains

Make sure that power has been cut off before disconnecting ground protection.

A.3.3.2: Electrical safety: general rules

DANGER! Possibility of personal injury: carefully observe the specific procedures for installation / turn–up and commissioning / maintenance of equipment parts where d.c. power is present, described in the relevant installation / turn–up and commissioning / maintenance documents and the following general rules:

a) Personal injury can be caused by –48 V dc. Avoid touching powered terminals with any exposed part of your body.

b) Short circuiting, low-voltage, low-impedance, dc circuits can cause severe arcing that can result in burns and/or eye damage. Remove rings, watches, and other metal jewelry before working with primary circuits. Exercise caution to avoid shorting power input terminals.

All rights reserved. Passing on and copying of this document, use and communication of its contents not permitted without written authorization from Alcatel.

All rights reserved. Passing on and copying of this document, use and communication of its contents not permitted without written authorization from Alcatel.

A.3.4 : Risks of Explosions

A.3.4.1: Labelling and safety instructions

This risk is present when batteries are used, and it is signalled by the following label:

Therefore, slits or apertures are made to let air circulate freely and allow dangerous gasses to down flow (battery–emitted hydrogen). A 417–IEC–5641 Norm. compliant label is affixed next to it indicating that the openings must not be covered up.

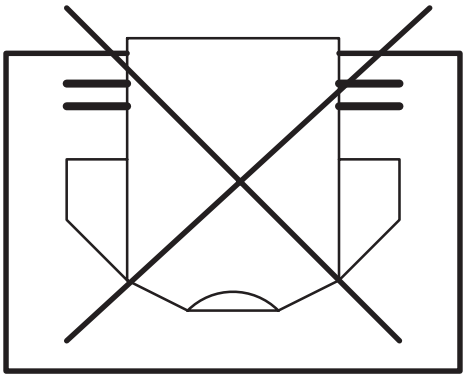

A.3.5 : Moving Mechanical Parts

A.3.5.1: Labelling and safety instructions

The following warning label is affixed next to fans or other moving mechanical parts:

Before carrying out any maintenance operation see that all the moving mechanical parts have been stopped.

A.3.6 : Heat–radiating Mechanical Parts

A.3.6.1: Labelling and safety instructions

The presence of heat–radiating mechanical parts is indicated by the following warning label in compliancy with IEC 417 Norm, Fig.5041:

DANGER! Possibility of personal injury: carefully observe the specific procedures for installation / turn–up and commissioning / maintenance of equipment parts where heat–radiating mechanical parts are present, described in the relevant installation / turn–up and commissioning / maintenance documents and the following general rule:

a) Personal injury can be caused by heat. Avoid touching powered terminals with any exposed part of your body.

All rights reserved. Passing on and copying of this document, use and communication of its contents not permitted without written authorization from Alcatel.

All rights reserved. Passing on and copying of this document, use and communication of its contents not permitted without written authorization from Alcatel.

A.3.7 : Microwave radiations

Equipment emitting RF power (Reminder from site preparation procedure):

– The site must be compliant with ICNIRP guidelines or local regulation if more restrictive.

– The following rules should be strictly applied by Customer:

- Non authorized persons should not enter the compliance boundaries, if any, for the general public.
- Compliance RF boundaries, if any, related to Electro Magnetic Field exposure must be marked.
- Workers should be allowed to switch–off the power if they have to operate inside compliance boundaries.
- Assure good cable connection.
- Install the antenna as high as possible from floor or area with public access (if possible the cylinder delimitating the compliance boundaries, if any, or the cylinder corresponding to the transmission area directly in front of antenna with the same diameter as the antenna, more than 2 meters high).
- Install the antenna as far as possible from other existing equipment emitting RF power.

– **Anyway remind that someone standing in front of the 9400AWY antenna may cause traffic shutdown.**

Place the relevant stickers:

EMF emission warning sign

On the site when applicable (when people can cross the compliance boundaries and/or the transmission area of the antenna, i.e. roof top installation)

– Warning label “Do not stand on the antenna axis”

On the mast (front side)

– EMF emission warning sign (Yellow and black) to be placed at bottom of antenna, visible by someone moving in front of the antenna (roof top installation)

On the antenna (rear side)

– EMF emission warning sign, placed on the antenna.

A.3.8 : Specific safety rules in this handbook

Specific safety rules are specified in the following chapters:

– **chapter 3–5, para.3–5.2.2 on page 152**

– **chapter 3–5, para.3–5.3.1 on page 153**

– **chapter 3–5, para.3–5.5.5.7 on page 168**

A.4 : Electromagnetic Compatibility (EMC norms)

The equipment's EMC norms depend on the type of installation being carried out (cable termination, grounding etc.,) and on the operating conditions (equipment, setting options of the electrical/electronic units, presence of dummy covers, etc.).

- Before starting any installation, turn–on, tests & operation and maintenance work refer to the Technical Handbook, specifically to Handbooks:
  - Installation,
  - Line–Up or Commissioning
  - Maintenance chapter in this Handbook
- The norms set down to guarantee EMC compatibility, are distinguished inside this handbook by the symbol and term:

ATTENTION **EMC NORMS**

A.4.1 : EMC General Norms – Installation

- All connections (towards the external source of the equipment) made with shielded cables use only cables and connectors suggested in this technical handbook or in the relevant Plant Documentation, or those specified in the Customer's"Installation Norms." (or similar documents)
- Shielded cables must be suitably terminated
- Install filters outside the equipment as required
- Ground connect the equipment utilizing a conductor with proper dia. and impedance
- Mount shields (if utilized), previously positioned during the installation phase, but not before having cleaned and decrease it.
- Before inserting the shielded unit proceed to clean and decrease all peripheral surfaces (contact springs and connection points, etc.)
- Screw fasten the units to the subrack.
- To correctly install EMC compatible equipment follow the instructions given.

A.4.2 : EMC General Norms – Turn–on, Tests & Operation

- Preset the electrical units as required to guarantee EMC compatibility
- Check that the equipment is operating with all the shields properly positioned (dummy covers, ESD connector protections, etc.)
- To properly use EMC compatible equipment observe the information given

A.4.3 : EMC General Norms – Maintenance

- Before inserting the shielded unit, which will replace the faulty or modified unit, proceed to clean and decrease all peripheral surfaces (contact springs and connection points, etc.)
- Clean the dummy covers of the spare units as well.
- Screw fasten the units to the subrack.

All rights reserved. Passing on and copying of this document, use and communication of its contents not permitted without written authorization from Alcatel.

All rights reserved. Passing on and copying of this document, use and communication of its contents not permitted without written authorization from Alcatel.

A.5 : Equipment protection against electrostatic discharges

Before removing the ESD protections from the monitors, connectors etc., observe the precautionary measures stated. Make sure that the ESD protections have been replaced and after having terminated the maintenance and monitoring operations.

Most electronic devices are sensitive to electrostatic discharges, to this concern the following warning labels have been affixed:

Observe the precautionary measures stated when having to touch the electronic parts during the installation/maintenance phases.

Workers are supplied with antistatic protection devices consisting of:

- an elasticized band worn around the wrist
- a coiled cord connected to the elasticized band and to the stud on the subrack.

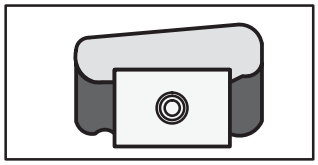

ELASTICIZED BAND

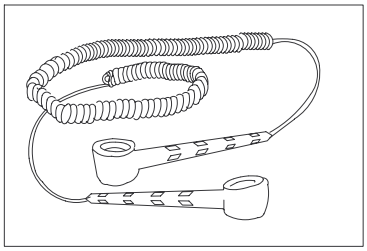

COILED CORD

Fig. 88. Antistatic protection device kit

A.6 : Suggestions, notes and cautions

Suggestions and special notes in this handbook are marked by the following symbol:

Suggestion or note....

Cautions to avoid possible equipment damage are marked by the following symbol:

TITLE...

(caution to avoid equipment damage)

statement....

A.7 : Labels affixed to the Equipment

This paragraph indicates the **positions** and the **information contained** on the identification labels affixed to the equipment, with the exception of those already mentioned in para.A.3.2 (page 225) thru' A.5 (page 231).

The label description is grouped as follows:

– Labels specific for the Equipment, on this page

– General Use Labels, starting on page 234.

A.7.1 : Labels specific for the equipment

A.7.1.1: IDU labels

N.B. Ref.Fig. 91. on page 235 for label position.

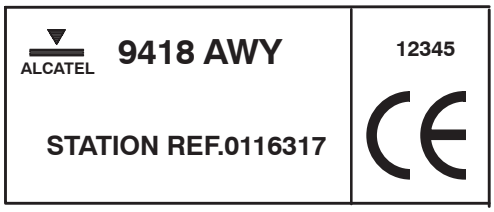

SYMBOL OR WRITING	MEANING
ALCATEL	Alcatel Logo
9618 AWY (example)	Equipment Acronym
12345 (example)	Competent Body Number
STATION REF.0116317 (example)	System Documentation Reference
CE	European Community Logo

Fig. 89. Label affixed on the IDU

All rights reserved. Passing on and copying of this document, use and communication of its contents not permitted without written authorization from Alcatel.

All rights reserved. Passing on and copying of this document, use and communication of its contents not permitted without written authorization from Alcatel.

A.7.1.2: ODU labels

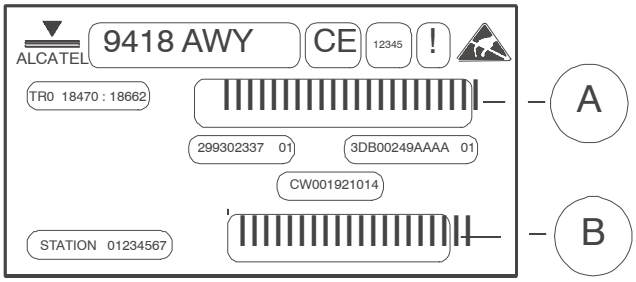

SYMBOL OR WRITING	MEANING
ALCATEL	Alcatel Logo
9418 AWY (example)	Equipment Acronym
CE	European Community Logo
12345 (example)	Competent Body Number
!	Not Harmonized Frequency Logo
	ElectroStatic Device Logo
TR0 18470:18662 (example)	Transceiver “0” Frequency Range
299302337 01 (example)	Factory P/N + CS
3DB00249AAAA 01 (example)	ANV P/N + CS
A	ANV P/N + CS Bar Code 128
CW001921014 (example)	Factory S/N
B	Factory S/N Bar Code 128
STATION 01234567 (example)	System Documentation Reference

Fig. 90. Label affixed on the ODU

A.7.2 : General Use Labels

Fig. 91. thru' Fig. 94. illustrate the most common **positions** of the labels on the units, modules and subracks.

Fig. 95. thru' Fig. 96. illustrate the **information** (e.g., identification and serial No.) printed on the labels.

The table below relates the ref. numbers stated on the figures to the labels used.

Labelling depicted hereafter is for indicative purposes and could be changed without any notice.

Tab. 62. Label references

Ref. No.	Name of Label
1	Label specifying item not on catalogue (P/N. and serial number)
2	Label specifying item on catalogue (P/N. and serial number)
3	Item identification label – item on catalog
4	Label identifying the equipment
5	Label specifying item on catalogue (P/N.) + CE mark
6	Serial number of item specified on catalogue + Subrack ESD mark
7	Homologation certificate number (optional)

On contract basis, customized labels can be affixed to the equipment.

Standard labels can be affixed to any position on the equipment, as required by the Customer.

However, for each of the above are applied the rules defined by each individual Customer.

All rights reserved. Passing on and copying of this document, use and communication of its contents not permitted without written authorization from Alcatel.

All rights reserved. Passing on and copying of this document, use and communication of its contents not permitted without written authorization from Alcatel.

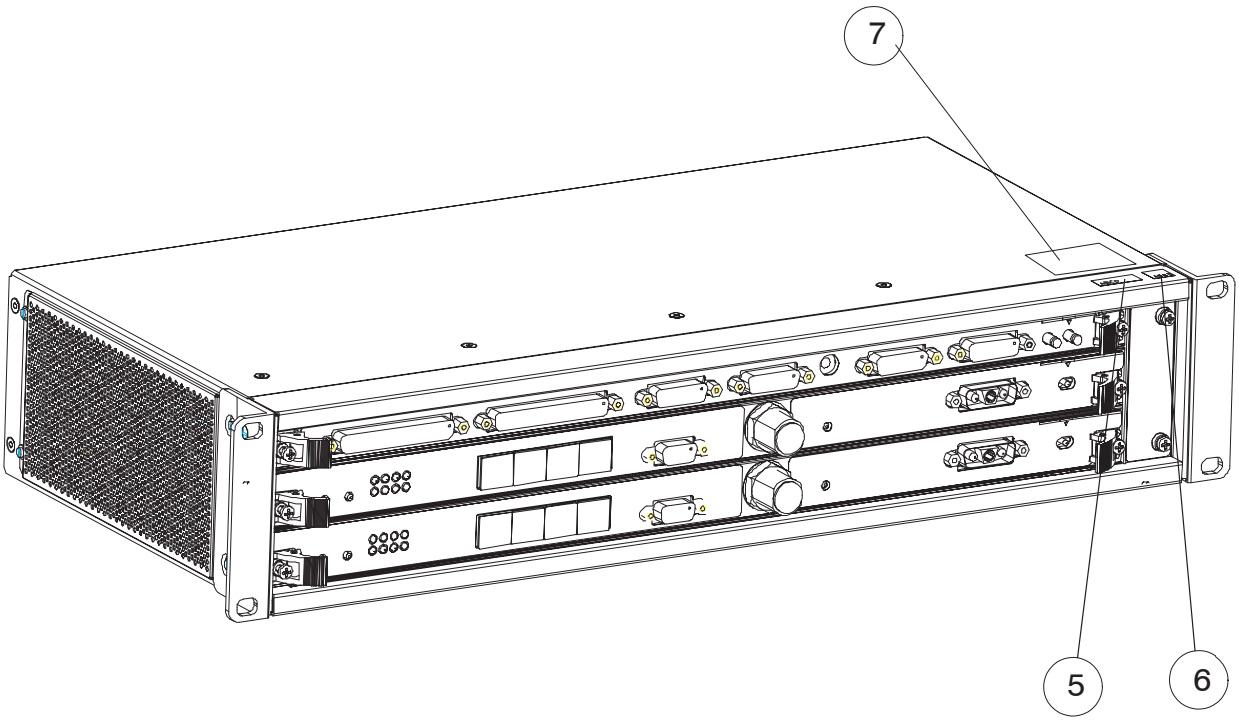

NOTE : The above reference numbers are detailed on on Tab. 62. on page 234.

Fig. 91. Subrack labels

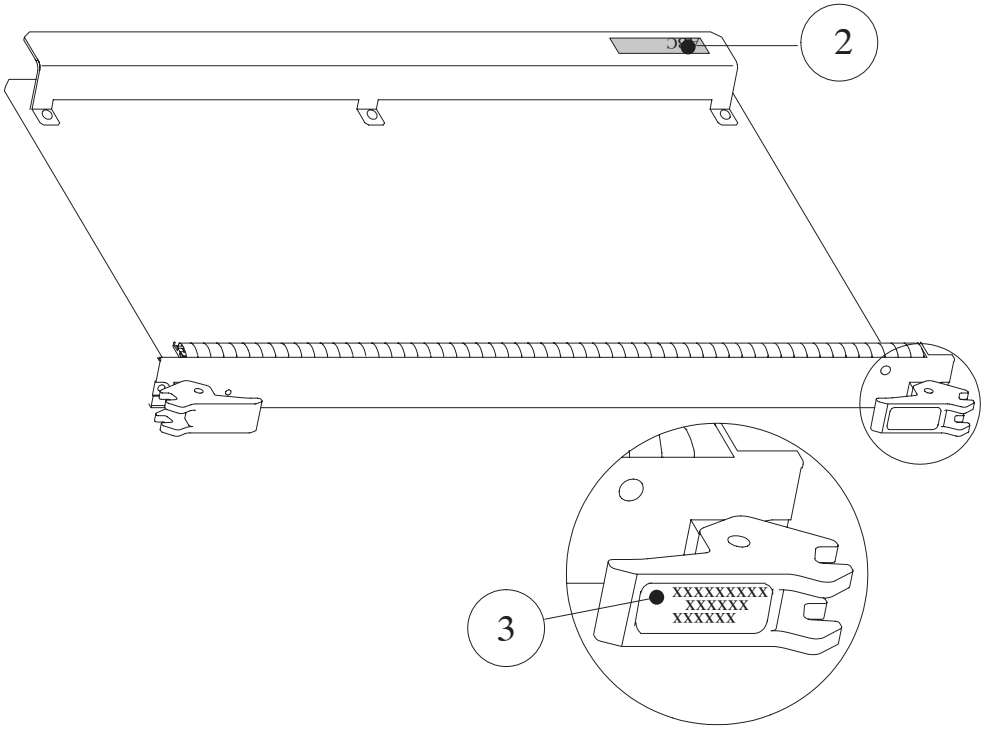

NOTE : The above reference numbers are detailed on Tab. 62. on page 234

Fig. 92. Labels on units with standard cover plate

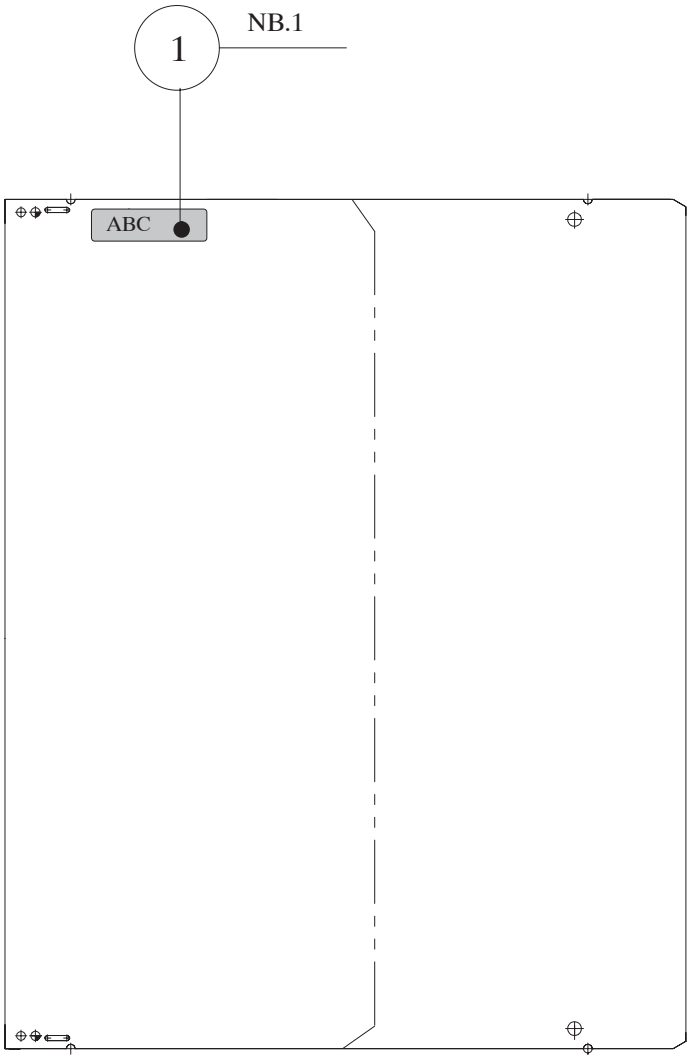

NB.1 = The label is present on the p.c.s. component side

NOTE : The above reference numbers are detailed on Tab. 62. on page 234

Fig. 93. Internal label for Printed Board Assembly

All rights reserved. Passing on and copying of this document, use and communication of its contents not permitted without written authorization from Alcatel.

All rights reserved. Passing on and copying of this document, use and communication of its contents not permitted without written authorization from Alcatel.

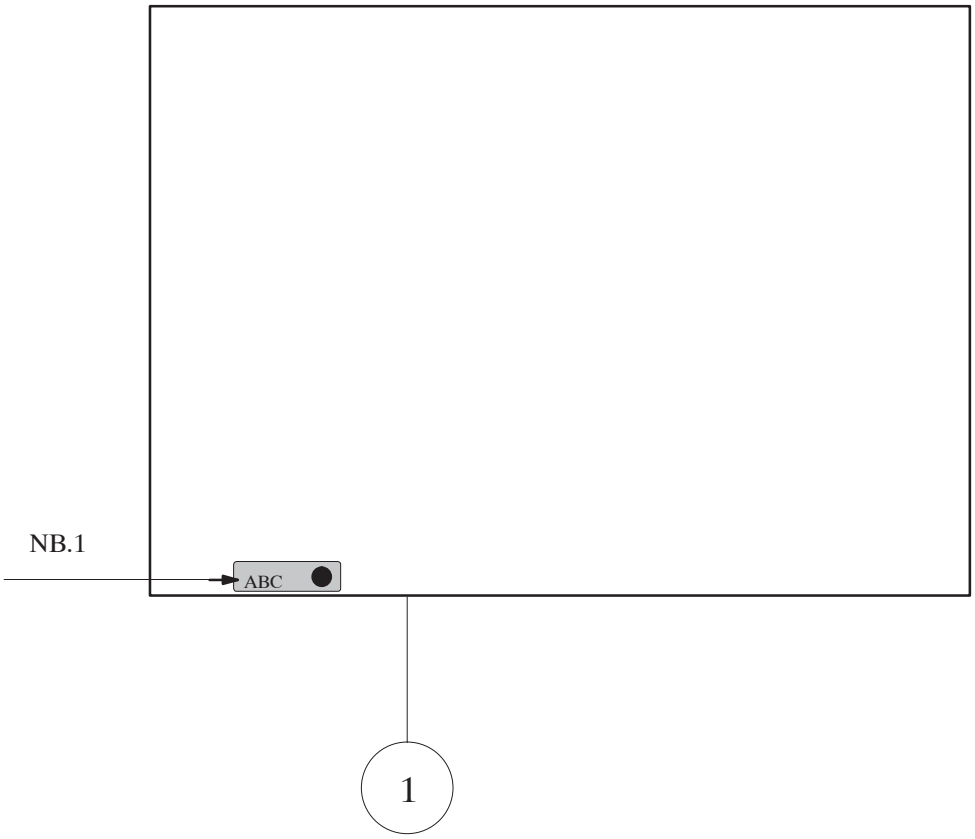

NB. 1 = The label is present on p.c.s. components side or rear side on the empty spaces.

NOTE : The above reference numbers are detailed on Tab. 62. on page 234

Fig. 94. Back panels internal label

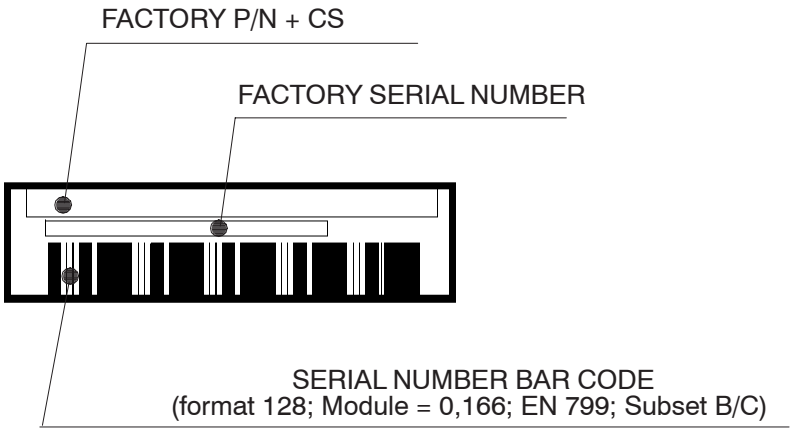

Fig. 95. Label specifying item not on catalogue (P/N. and serial number)

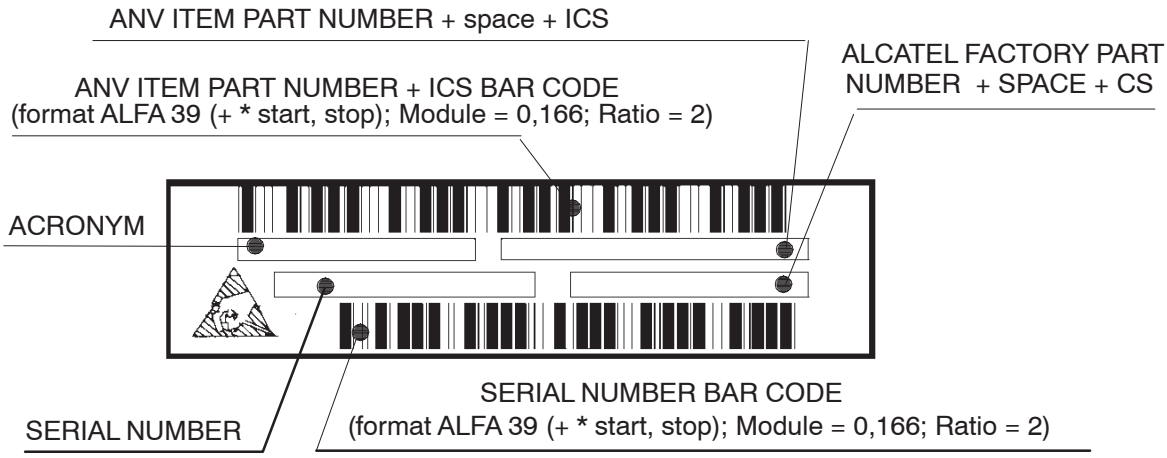

Fig. 96. Label specifying item on catalogue (P/N. and serial number)

All rights reserved. Passing on and copying of this document, use and communication of its contents not permitted without written authorization from Alcatel.

All rights reserved. Passing on and copying of this document, use and communication of its contents not permitted without written authorization from Alcatel.

APPENDIX B : DOCUMENTATION GUIDE

This appendix contains all information regarding:

– this handbook, herebelow

– the Customer Documentation set this handbook belongs to, on page 243.

B.1 : Handbook guide

This chapter contains all information regarding this handbook and is structured as follows:

– **Handbook applicability** herebelow
– **Purpose of the handbook** on page 240
– **Handbook history** on page 241

B.1.1 : Handbook applicability

a) Product–release applicability

This handbook applies to the following product-releases:

PRODUCT	RELEASE	ANV P/N	FACTORY P/N
9411AWY	1.00.00	3DB 05476 AAAA	522.174.410
9413AWY	1.00.00	3DB 05478 AAAA	522.174.500
9415AWY	1.00.00	3DB 05481 AAAA	522.174.600
9418AWY	1.00.00	3DB 04729 AAAA	522.174.000
9423AWY	1.00.00	3DB 05484 AAAA	522.174.700
9425AWY	1.00.00	3DB 05490 AAAA	522.174.900
9428AWY	1.00.00	3DB 05493 AAAA	522.175.000
9432AWY	1.00.00	3DB 05496 AAAA	522.175.100
9438AWY	1.00.00	3DB 04732 AAAA	522.144.100

b) Version applicability

The current edition of this handbook applies to the set of system's equipment, configurations and features associated to the following SWP versions:

REF	SWP	P/N	Version
(a)	SWP 9400AWY R.1.0 CD–ROM	3DB 04798 AAAA	V.1.0.0

B.1.2 : Purpose of the handbook

This handbook belongs to the Customer Documentation set envisaged for the equipment specified in para.B.1.1 on page 239.

Refer to para.B.2 on page 243 in order to have the list and description of the Customer Documentation set.

With reference to equipment configuration stated in para. B.1.1 on page 239, and taking into account that the system consists of an InDoor Unit (IDU) and of an OutDoor Unit (ODU), this handbook provides the following information:

- system description at different detail levels, with regard to system, hardware and software
- system technical specifications
- IDU and ODU item Part Numbers and equipping rules (provisioning)
- unit operative hardware description: access point description (usage of LED, pushbuttons, switches and connectors for Customer use), connection rules, hardware setting options
- spare parts provisioning
- routine maintenance procedures
- corrective maintenance and unit replacement procedures **(N.B.)**

N.B. The C.T. Operator's Handbook must be always available to the Operator in charge of equipment troubleshooting and repair, as it contains the information necessary to carry out troubleshooting through the Craft Terminal.

All rights reserved. Passing on and copying of this document, use and communication of its contents not permitted without written authorization from Alcatel.

All rights reserved. Passing on and copying of this document, use and communication of its contents not permitted without written authorization from Alcatel.

B.1.3 : Handbook history

B.1.3.1: List of the editions and modified parts

The following Tab. 63. indicates the handbook parts new and modified with respect to the previous edition.

Legend: **n** = new part **m** = modified part blank= part unchanged

The revision bars on the table's rows indicate changes in the structure (e.g. new sections, or information shifted within the handbook) with respect to the previous edition.

Tab. 63. Handbook history HANDBOOK EDITION ⇒		01	02	03	04	05
SECTION 1: SYSTEM DESCRIPTION AND TECHNICAL SPECIFICATIONS		n				
1–1	Introduction to the 9400 AWY radio system family	n				
1–2	Technical specifications	n				
SECTION 2: SYSTEM COMPOSITION AND CONFIGURATIONS		n				
2–1	IDU part lists	n				
2–2	IDU provisioning	n				
2–3	ODU and antenna configurations, part lists and provisioning	n				
2–4	IDU operative information	n				
2–5	Distributor subracks	n				
2–6	ODU and related optional tools operative information	n				
2–7	Station layouts	n				
SECTION 3: MAINTENANCE		n				
3–1	Maintenance Policy	n				
3–2	Set and use of EOW functions	n				
3–3	Maintenance Tools and Spare Parts	n				
3–2	First Level Maintenance	n				
3–5	Second Level Maintenance	n				
SECTION 4: FUNCTIONAL DESCRIPTION		n				
4–1	System description	n				
4–2	Alarms	n				
SECTION 5: APPENDICES		n				
A	Safety–EMC–ESD norms and equipment labelling	n				
B	Documentation guide	n				
C	List of symbols and abbreviations	n				

B.1.3.2: Notes on draft editions

Draft editions neither validated nor officially released issue, for internal validation purposes:

- Ed.01**A**–DRAFT created on December 10th, 2003 (Author: G.Ziliani)
- Ed.01**B**–DRAFT created on March 3rd, 2004 (Author: E.Corradini, F.Fass)
- Ed.01**C**–DRAFT created on March 17th, 2004 (Author: E.Corradini)
- Ed.01**D**–DRAFT created on May 3rd, 2004 (Author: E.Corradini)

B.1.3.3: Notes on Ed.01

Ed.01 created on May 10th, 2004 is the first released and validated version of the handbook.

All rights reserved. Passing on and copying of this document, use and communication of its contents not permitted without written authorization from Alcatel.

1AA 00014 0004 (9007) A4 – ALICE 04.10

All rights reserved. Passing on and copying of this document, use and communication of its contents not permitted without written authorization from Alcatel.

B.2 : Documentation set description

This paragraph contains all information regarding the 9400AWY Rel.1.0 Customer Documentation and is organized as follows:

– **9400AWY Rel.1.0 product–release–version handbooks** herebelow
– **General on Alcatel Customer Documentation** on page 246

B.2.1 : 9400AWY Rel.1.0 product–release–version handbooks

This paragraph lists and briefly describes the handbooks making up the documentation set envisaged for 9400 AWY Rel.1.0 product release.

Please refer to following para.B.2.2 on page 246 for a general description of Alcatel Customer Documentation system.

The list of handbooks given here below is valid as at the issue date of this Handbook and can be changed without any obligation for ALCATEL to update it in this Handbook.

Some of the handbooks listed here below may not be available as at the issue date of this Handbook.

The standard Customer Documentation is in the English language and is composed by different handbooks.
Tab. 64. herebelow lists the handbooks.
The [REF] indication in Tab. 64. is relevant to the handbook brief description given in tables Tab. 65. thru' Tab. 69. in the following.

Tab. 64. 9400 AWY Rel.1.0 product release handbooks

TECHNICAL HANDBOOK	REF
9400AWY Technical Handbook	[A]
INSTALLATION AND LINE–UP HANDBOOKS	
9400AWY Installation Handbook	[B]
9400AWY Line–up Guide	[C]
Interference investigation procedure	[F]
OPERATOR'S HANDBOOKS (in alternative, according to SWP used)	
9400AWY/FSO CT Operator's Handbook **SWP 1.0**	[D]
9400AWY/FSO CT Operator's Handbook **SWP 1.1**	[E]
DOCUMENTATION CD–ROM	
DCP 9400AWY R.1.0 CD_ROM	[G]
1320 CT OPERATOR'S HANDBOOKS	
– 1320CT Basic Operator's Handbook – AS Operator's Handbook – ELB Operator's Handbook see Tab. 70. on page 245	

Tab. 65. 9400AWY Technical Handbooks			
REF	**HANDBOOK**	**ANV P/N Factory P/N**	**NOTES**
[A]	9400 AWY Rel. 1.0 Technical Handbook	3DB 05653 BAAA without Factory P/N	this handbook
	Provides information regarding AWY equipment description and composition, station layouts, hardware setting documentation and maintenance.		

Tab. 66. 9400AWY Installation and Line–Up Handbooks • The Installation Handbook provides information regarding Equipment installation, according to Alcatel Installation Engineering Dept. rules. • The Line–up Guide provides information regarding equipment line up and commissioning, according to Alcatel Installation Engineering Dept. rules.			
REF	**HANDBOOK**	**ANV P/N Factory P/N**	**NOTES**
[B]	9400 AWY Rel.1.0 Installation Handbook	3DB 05653 DAAA without Factory P/N	
[C]	9400 AWY Rel.1.0 Line–up Guide	3DB 05653 EAAA without Factory P/N	

Tab. 67. Operator's Handbooks related to the specific Software Package SWP			
REF	**HANDBOOK**	**ANV P/N Factory P/N**	**NOTES**
[D]	9400 AWY/FSO Rel.1.0 CT Operator's Handbook **SWP 1.0**	3DB 05653 CAAA without Factory P/N	**nb1**
[E]	9400 AWY/FSO Rel.1.0 CT Operator's Handbook **SWP 1.1**	3DB 05653 FAAA without Factory P/N	**nb2**
Provides AWY/FSO SWP screens and operational procedures for Equipment SW management and maintenance. **nb1** SWP identification: REF.(a) on page 239 **nb2** SWP identification: t.b.d.			

All rights reserved. Passing on and copying of this document, use and communication of its contents not permitted without written authorization from Alcatel.

All rights reserved. Passing on and copying of this document, use and communication of its contents not permitted without written authorization from Alcatel.

Tab. 68. Handbooks common to all Alcatel Radio Transmission products

REF	HANDBOOK	ANV P/N Factory P/N	NOTES
[F]	Interference investigation procedure	3DB 04165 EAAA 955.203.374 Z	
	Describes the measurement procedure for the interference searching in the various RF bands used by Alcatel Radio Transmission products.		

Tab. 69. 9400AWY Rel.1.0 Documentation on CD–ROM

REF	CD–ROM TITLE	ANV P/N Factory P/N	NOTES
[G]	DCP 9400FSO 1.0 CD_ROM	3DB 05654 AAAA 417.200.030	
	Contains, in electronic format (ACROBAT pdf files), all handbooks listed in Tab. 64. on page 243 (when all envisaged handbooks are released), with exception of 1320 CT Operator's Handbooks for which the CD–ROM REF.[K] (herebelow) is envisaged		

Tab. 70. Documentation common to Alcatel Network Elements using 1320CT platform

REF	Q3CT–K Version (N.B.)	HANDBOOK	ANV P/N Factory P/N	NOTES
[H]	⩾ 3.0.1	1320CT Rel.3.x Basic Operator's Handbook	3AL 79551 AAAA 957.140.042 N	
	Provides general information and operational procedures common to all 1320CT (Craft terminal) of Alcatel InfoModel Network Elements.			
[I]	⩾ 3.0.1	AS Rel.6.5 Operator's Handbook	3AL 88876 AAAA without Factory P/N	
	Provides detailed information and operational procedures regarding the alarm Surveillance software embedded in the 1320CT software package.			
[J]	⩾ 3.0.1	ELB Rel.2.x Operator's Handbook	3AL 88877 AAAA without Factory P/N	
	Provides detailed information and operational procedures regarding the Event Log Browser software embedded in the 1320CT software package.			
[K]	⩾ 3.0.1	DCP 1320 CT 3.x CD_ROM EN	3AL 79552 AAAA 417.100.032	
	Contains, in electronic format, the 1320 CT Operator's Handbook REF.[H] to [K]			
N.B.	The CT Version is displayed when, on the PC, you select the 1320CT application for its launch.			

B.2.2 : General on Alcatel Customer Documentation

This paragraph describes in general the Alcatel Customer Documentation system, details the association between the product levels and the associated documentation, and explains Customer Documentation characteristics as well as the policies for its delivery and updating.

This paragraph is fully applicable to the 2nd generation Radio Product families of Alcatel WTD (Wireless Transmission Division) only.

B.2.2.1: Customer–Independent Standard Customer Documentation

a) Definition

Standard Customer Documentation, referred to hereafter, must be always meant as plant–independent and is always independent of any Customization.

Plant–dependent and/or Customized documentation, if envisaged by the contract, is subjected to commercial criteria as far as contents, formats and supply conditions are concerned

N.B. Plant–dependent and Customized documentation is not described here.

b) Aims of standard Customer Documentation

Standard system, hardware and software documentation is meant to give the Customer personnel the possibility and the information necessary for installing, commissioning, operating, and maintaining the equipment according to Alcatel Laboratory design and Installation Dept. choices. In particular:

- the contents of the handbooks associated to the software applications focus on the explanation of the man–machine interface and of the operating procedures allowed by it;
- maintenance is described down to faulty PCB location and replacement.

N.B. No supply to Customers of design documentation (like PCB hardware design and production documents and files, software source programs, programming tools, etc.) is envisaged.

All rights reserved. Passing on and copying of this document, use and communication of its contents not permitted without written authorization from Alcatel.

All rights reserved. Passing on and copying of this document, use and communication of its contents not permitted without written authorization from Alcatel.

B.2.2.2: Product levels and associated Customer Documentation

See Fig. 98. on page 248.

a) Products

A ”**product**” is defined by the network hierarchical level where it can be inserted and by the whole of performances and services that it is meant for.

E.g. 9400 AWY is a product.

b) Product-releases

A ”product” evolves through successive **”product–releases”,** which are the real products marketed for their delivery at a certain ”product–release” availability date. A certain ”product–release” performs more functionalities than the previous one.

E.g. Rel.1.0 and Rel.2.0 are two successive ”product–releases” of the same ”product”.

A ”product–release” comprehends a set of hardware components and at least one **“Software Package**” (**SWP**); as a whole, they identify the possible network applications and the equipment performances that the specific ”product–release” has been designed, engineered, and marketed for.

c) Configurations and Network Elements

In some cases, a ”product–release” includes different possible **“configurations”** which are distinguished from one another by different **“Network Element”** (NE) types and, from the management point of view, by different SWPs.

d) SWP Releases and Versions

See Fig. 97. herebelow.

A SWP is identified by the “configuration” name and by the “version” number (tree digits).

The version’s first digit corresponds to the “product–release” number first digit; the second digit identifies, together with the first, the SWP **“release”**.

The third digit of the SWP version identifies the Patch Level of the SWP Release.

	SWP version		
	SWP Release		Patch Level
	Product Release’s first digit		
SWP evolution for bug fixing purposes and/or minor additional features (same SWP Release within same Product–Release)	1.	0.	7
	1.	0.	9
SWP evolution for main additional features (new SWP Release within same Product–Release) (**N.B.** see next page)	1.	0.	7
	1.	1.	2
SWP evolution for additional features (new SWP Release of a new Product–Release)	1.	0.	7
	2.	0.	2

Fig. 97. Example of SWP Release and Version numbering

N.B. Sometimes, different SWP Releases (within the same Product–Release) are commercially distinguished by different names, e.g. :

SWP version	SWP–Release commercial name
1.0.x	1.0
1.1.x	1.0B
1.2.x	1.0C

e) Customer Documentation

A ”product–release–(configuration)” has its own set of standard Customer Documentation, usually formed of several handbooks, i.e., in general:

- **System and Hardware documentation:**
  - one (or more) **Technical Handbook**(s)
  - an **Installation Handbook**
  - a **Commissioning Handbook** or **Line–Up Guide**
- **Software documentation:**
  - a **Craft Terminal Operator’s Handbook**, associated to the specific SWP–Release
  - other **Operator’s Handbooks** (typically those associated to the SW platform embedded in the SWP)

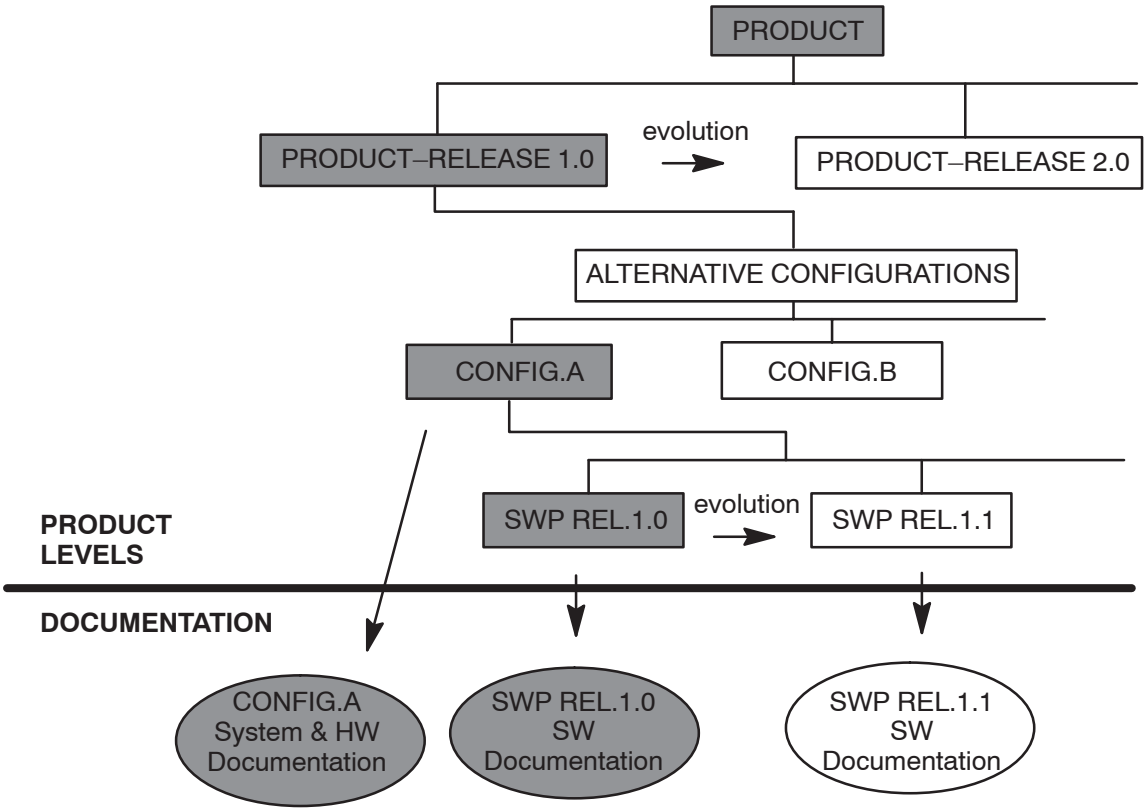

Fig. 98. Example of Product levels and associated Customer Documentation

All rights reserved. Passing on and copying of this document, use and communication of its contents not permitted without written authorization from Alcatel.

All rights reserved. Passing on and copying of this document, use and communication of its contents not permitted without written authorization from Alcatel.

B.2.2.3: Handbook and CD–ROM supply to Customers

a) Standard supply

Handbooks and CD–ROMs are standard commercial items and are ordered and delivered as any other Alcatel commercial item.
Handbooks and CD–ROMs are not automatically delivered together with the equipment they refer to.
The number of handbooks or CD–ROMs per type to be supplied must be decided at contract level.

b) Product–documentation consistency

Equipment description and lay–out are always general, i.e. they never describe the actual composition of the equipment supplied to Customer (this task is entrusted to plant–dependent documentation).
Detailed hardware documentation concerns actually supplied units and is coherent with the production issue of such units.
Software–associated handbooks are coherent with the supplied SWP release.
Copies of the handbooks regarding a specific product–release previously delivered can be required specifying P/N and edition.

c) In–advance supply

Whenever handbooks or CD–ROMs are delivered before the relevant equipment delivery, there is the risk that their contents might not agree with the characteristics of the equipment which will be delivered: the more they are in advance the less are they likely to agree.

d) Supplying updated handbooks and CD–ROMs to Customers

Supplying updated handbooks or CD–ROMs to Customers who have already received previous issues is subject to commercial criteria.
By updated handbook delivery, we mean the supply of a complete copy of a new issue of the handbook (supplying errata–corrige sheets is not envisaged).

e) Copyright notification

The technical information of the handbooks and CD–ROMs supplied to Customers is the property of ALCATEL and must not be copied, reproduced or disclosed to a third party without written consent.

f) Supply to Customers of Customer Documentation source files

Presently not envisaged.

All rights reserved. Passing on and copying of this document, use and communication of its contents not permitted without written authorization from Alcatel.

1AA 00014 0004 (9007) A4 – ALICE 04.10

All rights reserved. Passing on and copying of this document, use and communication of its contents not permitted without written authorization from Alcatel.

APPENDIX C : LIST OF SYMBOLS AND ABBREVIATIONS

Tab. 71. List of symbols

N.B. This table lists some symbols whose interpretation could be doubtful.

SYMBOL	MEANING AND COMMENTS
÷	In this handbook it is not the division symbol. It means 'from .. to ..'. E.g.: <value1> ÷ <value2> means: **from** <value1> (included) **to** <value2> (included)
POLARIZATION SYMBOLS	A polarization symbol like this: ↑ can be assumed as either horizontal ↑ H or vertical ↑ V Once you have decided a polarization (e.g. ↑ H) the opposite direction symbol will be opposite polarization (e.g. ↓ V)

Tab. 72. List of abbreviations

ABBREVIATION	MEANING
STARTING WITH NUMBERS	
9400AWY	Short–haul low/medium capacity digital microwave radio links
9400FSO	PDH Low/Medium Capacity Free Space Optic System
9600FSO	SDH/SONET High Capacity Free Space Optics System
9600LSY	STM 1/0 Long Haul Digital Radio Relay System
9600USY	Urban Haul Synchronous split mount Radio System
A	
ABIL	Enabling
ABN	Abnormal
AC	Alternate Current
ACSE	Association Control Service Element
ADC – A/D	Analog to Digital Converter
AE	Access Enable
AF	Atomic Function
ADM	Add and Drop Multiplexer
AGC	Automatic Gain Control
AIS	Alarm indication Signal
AMI	Alternate Mark Inversion
AND	Alarm on both station batteries
ANSI	American National Standard Institute

Tab. 72. List of abbreviations

ABBREVIATION	MEANING
AP	Alternate Polarization
API	Access Point Identifier
APS	Automatic Protection Switching
ASAP	Alarm Severity Assignment Profile
ASE	Application Service Element
ASIC	Application Specific Integrated Circuit
AT	Attended Alarm
ATL	Far Terminal Alarm
ATM	Asynchronous transfer Mode
ATPC	Automatic Transmit Power Control
ATTD	ATTendeD (alarm storing)
AUX	AUXiliary
B	
BATT	Battery
BB	Base Band
BBE	Background Block Error
BCA	Common Battery Dial Pulsing (Telephone Set)
BER	Bit Error Rate
BNC	Bayonet Not Coupling
BSC	Base Station Controller
BTS	Base Transceiver Station
C	
CAND	All power supply units are faulty
CCDP	Co–Channel Dual Polarized (Frequency re–use)
CCITT	International Telephone and Telegraph Consultative Committee
CE	European Conformity
C/I	Carrier to Interference ratio
CK	Clock
CLA	Common Loss Alarm
CLEC	Competitive Local Exchange Carrier
CMISE	Common Management Information Service Element
CMISS	Card Missing
CO	Central Office
COAX	Coaxial
CP	Co–polar
CPE	Customer premises equipment

All rights reserved. Passing on and copying of this document, use and communication of its contents not permitted without written authorization from Alcatel.

All rights reserved. Passing on and copying of this document, use and communication of its contents not permitted without written authorization from Alcatel.

Tab. 72. List of abbreviations

ABBREVIATION	MEANING
CPI	Incoming parallel contacts
CPO	Outgoing parallel contacts
CPU	Central Processor Unit
CRC–n	Cyclic Redundancy Check – n
CS	(Item) Change Status
CT	Craft Terminal
CTP	Connection Termination Point
D	
DA	Distant Alarm
DAV	Distinguishing Attribute Value
D/A	Digital to Analog (converter/conversion)
DC	Direct Current
DCE	Data Circuit Terminating Equipment
DCN	Data Communication Network
DDF	Digital Distribution Frame
DEFEC	FEC Decoder
DEM	Demodulator
DEMUX	Demodulator
DF	Dialog Failure
DIV	Diversity
DM	Degraded Minute
DRRS	Digital Radio Relay System
DTE	Data Terminal Equipment
DTI	Department of Trade and Industry
DTMF	Dual Tone Multi Frequency
E	
EB	Errored Block
EBC	Errored Block Count
EBU	European Broadcasting Union
EC	Equipment Controller
ECC	Embedded Communication Channel
ECS	External Communication Service
ECT	Equipment Craft Terminal
EE	Equipment Engineering
EF	Equipment Failure
EFD	Event Forwarding Discriminator

Tab. 72. List of abbreviations

ABBREVIATION	MEANING
EIA	Electronic Industries Association
EIRP	Equivalent Isotropically Radiated Power
EMC	ElectroMagnetic Compatibility
EMI	Electromagnetic interference
EOW	Engineering Order Wire
EPS	Equipment Protection Switching
ES	Errored Second
ESD	Electrostatic discharges
ETR	European Telecommunication Report
ETS	European Telecommunication Standard
ETSI	European Telecommunication Standard Institute
EW	Early Warning
EWH	Early Warning High
EWL	Early Warning Low
EXC–BER	Excessive BER
F	
F	Interface F (for Craft Terminal) or Fuse
FCC	Federal Communications Commission
FD	Frequency Diversity
FE	Front End
FEC	Forward Error Correction (Code)
FIT	Failure Unit
FPGA	Field Programmable Gate Array
FR	’Failure Rate’ or ’Frequency Reuse’
FSO	Free Space Optics
G	
GA	General Alarm or Gate Array
GND	Ground
GNE	Gateway Network Element
GSM	Gateway Network Element
H	
H	Horizontal (polarization)
HBER	High Bit Error Rate
HDBK	Handbook
HDB3	High Density Binary 3
HDLC	High level Data Link Control

All rights reserved. Passing on and copying of this document, use and communication of its contents not permitted without written authorization from Alcatel.

All rights reserved. Passing on and copying of this document, use and communication of its contents not permitted without written authorization from Alcatel.

Tab. 72. List of abbreviations

ABBREVIATION	MEANING
HET	HETerofrequency or Frequency Diversity
HEW	High Early Warning
HK	HouseKeeping
HSB or **HST**	Hot Standby
HW	Hardware
HWP	Hardware Protection
I	
ID	IDentifier
IDU	InDoor Unit
IEC	International Electro technical Commission
IEEE	Institute of Electrical and Electronic Engineering
IF	Intermediate Frequency
IN	Input
IND	Indicative alarm
INT	Internal Local Alarms
I/O	Input/Output
IP	Internet Protocol
IRC	International Radiotechnical Commission
ISO	International Standards Organization
ITU–R (*)	International Telecommunication Union – Radiocommunication
ITU–T (*)	International Telecommunication Union – Telecommunication
L	
LAN	Local Area Network
LBER	Low Bit Error Rate
LC	Loss of Configuration
LDI	Local Defect Indication
LED	Light Emission Diode
LEW	Low Early Warning
LMDS	
LO	Local Oscillator
LOF	Loss Of Frame
LOM	Loss Of Multiframe
LOS	Loss Of Signal
LS	Low Speed
M	
MAJ	Major (alarm)

Tab. 72. List of abbreviations

ABBREVIATION	MEANING
MCF	Message Communication Function
MDT	Mean Dawn Time
MEM	Memorization
MIB	Management Information Base
MIN	Minor (alarm)
MOC	Managed Object Class
MOD	Modulator
MTBF	Mean Time Between Failures
MTTR	Mean Time To Repair
MUX	Multiplexer
N	
NBF	Narrow Band Filter
NDS	Near–end Defect Second
NA	Not Applicable
NE	Network Element
NEBC	Near–end Errored Block Count
NF	Noise Figure
NFD	Net Filter Discrimination
NG	Not Urgent
NMS	Network Management System
NRZ	Non Return to Zero
NSA	Non Service Aff.
NTP	Network Time Protocol
NURG	Not urgent alarm
O	
OCT	Office Craft Terminal
ODF	Optical Distribution Frame
ODU	OutDoor Unit
ODUC	ODU Controller
OFS	Out of Frame Second
OH	OverHead
O&M	Operation and Maintenance
OIRT	Russian Regulatory Body
OOF	Out Of Frame
OOS	Out Of Service
OR	Logic sum/Loss of only one station battery

All rights reserved. Passing on and copying of this document, use and communication of its contents not permitted without written authorization from Alcatel.

All rights reserved. Passing on and copying of this document, use and communication of its contents not permitted without written authorization from Alcatel.

Tab. 72. List of abbreviations

ABBREVIATION	MEANING
ORALIM	OR'ing of station power supply alarm
OS	Operation System
OSI	Open Systems Interconnection
OSPF	Open Shortest Path First
OUT	Output
OVF	Overflow
OW	Order Wire
	P
PABX	Private Automatic Branch Exchange
PBX	Private Branch Exchange
PC	Personal Computer
PDH	Plesiochronous Digital Hierarchy
PFAIL	Power supply failure
PI	Physical Interface
PLL	Phase Locked Loop
PM	Performance Monitoring
PPI	Plesiochronous Physical interface
ppm	parts per million
PPP	Point to Point Protocol
PRx	Received power
PRBS	Pseudo Random Binary Signal
P/S	Parallel/Serial converter
PSA	Protection Switch Actual
PSA C	Protection Switch Count
PSA D	Protection Switch Actual Duration
PSK	Portable Service Kit
PSR	Protection Switch Request
PSU	Power Supply Unit
PTx	Transmitted power
	Q
QAM	Quadrature Amplitude Modulation
QOS	Quality Of Service
	R
RAI	Remote Alarm Indication
RAM	Random Access Memory
RAPS	Radio Automatic Protection Switch

Tab. 72. List of abbreviations

ABBREVIATION	MEANING
RC	Radio Controller
RCK	Received clock
RCIM	Radio Channel Identifier Mismatch
RDI	Remote Defect Indication
RECC	Recommendation
RECT	Remote Equipment Craft Terminal
REI	Remote Error Indication
REF	Reference
REL	Release
RF	Radio Frequency
RI	Remote Inventory
RL	Received Level
RLTS	Received Level Threshold Second
RMS	Root Mean Square
RNURG	Not urgent Alarm command. Lights up the relative rack red LED
RPI	Radio Physical Interface
RPS	Radio Protection Switching
RSPI	Radio Synchronous Physical Interface
RT	Transceiver
RTF	Remote Terminal Failure
RTPC	Remote Transmit Power Control
RURG	Urgent Alarm command. Lights up the relative rack red LED
Rx	Receiver/Received
S	
SA	Service Affecting or Service Alarm
SC	Service Channel or System Controller
SD	Space Diversity
SES	Severely Errored Second
SF	Signal Fail
SNMP	Simple Network Management Protocol
SP	Splitter
SQ	Squelch
S/P	Serial to Parallel
SSF	Server Signal Fail
STBY	Standby
SU	Supervisory Unit

All rights reserved. Passing on and copying of this document, use and communication of its contents not permitted without written authorization from Alcatel.

All rights reserved. Passing on and copying of this document, use and communication of its contents not permitted without written authorization from Alcatel.

Tab. 72. List of abbreviations

ABBREVIATION	MEANING
SW	”Switch” or ”Software”
SWP	Software Package
	T
TA	Remote Alarm
TCP	Transmission Control Protocol
TD	Layout drawing
TDM	Time Division Multiplexer
TEM	Transversal Electric Mode
TIM	Trace Identifier Mismatch
TL	Transmitted Level
TLTS	Transmitted Level Threshold Second
TM	Transmission and Multiplexing
TMN	Telecommunication Management Network
TPH	Telephone
TP	Termination Point
TR	TRansceiver
TRIB	Tributary
TRU	Top Rack Unit
Tx	Transmitter/Transmitted
	U
U	Unavailability
UAS	UnAvailable Second
UAT	UnAvailable Time
UDR	Unpressurized Rectangular Waveguide Type
UG	Urgent Alarm
UMTS	Universal Mobile Telecommunications System
URG	Urgent
URU	Underlying Resource Unavailable
USY	Urban Haul Synchronous split mount Radio System
UT	Unavailability Time
UTRAN	Universal Terrestrial Radio Access Network
	V
V	Vertical (polarization)
VCO	Voltage Controller Oscillator
VF	Voice Frequency
VSWR	Voltage Standing Wave Ratio

Tab. 72. List of abbreviations

ABBREVIATION	MEANING
W	
WAN	Wide Access Network
WBF	Wide Band Filter
WIP	Wireless IP
WLT	Wireless Line Terminal
WS	Work Station
X	
XPD	Cross Polar Discrimination
XPIC	Cross Polar Interference Canceller
XPI	Cross Polar Interference
XPIF	Cross Polar Improvement Factor
XPOL	Cross Polar/Polarization

NOTES:

(*) Owing to change of name, all documents issued by the two ITU committees (CCIR ND CCITT) in 1992 (and in some cases even before then) are classified as ITU–R and ITU–T, respectively.

All rights reserved. Passing on and copying of this document, use and communication of its contents not permitted without written authorization from Alcatel.

END OF DOCUMENT